The NEWSLETTER

MARCH 2012 VOLUME 12, No. 3

Mercury Amateur Radio Association - MARA - North America - North East

In the month of March, and especially on Saint Patrick's Day, everyone is IRISH.

So here's wishin' to ye, "the LUCK O' the IRISH"!

CONTENTS

OTHER STUFF

Links that will take you to web locations referenced in this newsletter are shown in blue text.

E-mail your comments, ideas, or submissions to marane@mara.net or to ve1vq@eastlink.ca

Grandma Mara's RAMBLINGS

Turns out that Walter is a bit of a romantic! Every February, around Valentine's Day, our ward has its annual family Sweetheart Supper & Dance and this year he had invited me to go with him. I hadn't been to one for some years now, not since Grandpa passed away. Seemed kind of strange, the idea of going by myself. Anyway, when Walter asked, back in early January, I accepted.

Come the night of the event, Walter arrived at my door promptly at the appointed hour. Just like a little boy, he stood there with one hand behind his back. When I asked him what he was hiding, he shyly presented me with a lily corsage. Fortunately, he had asked Wendy about the color of the dress I would be wearing so he could get the matching flower, and she had tipped me off. With this thoughtful forewarning, I was prepared with a boutonniere for him.

By the time we arrived at the chapel, there were already quite a few people there. Walter attempted to pin my corsage on, and finally managed it after several false starts, and with some help from the Bishop's wife. For all of his considerable engineering skills, and his talents in working with his hands, Walter was all thumbs on this occasion! To be fair, I wasn't much better when it came my turn to pin on his boutonniere.

This year the ward's young men had the assignment to decorate (and a fantastic job they did!) and the young women had the assignment to act as servers. Wendy had finagled it so she had our's and her parent's tables in her section, and she made sure we all were well taken care of.

"I know what you're wondering - did he kiss me when he took me home and walked me to the door?"

Afterwards, we moved the tables back against the walls to make way for the dance part of the evening. Walter is certainly good at a lot of things but dancing isn't one of them! Most of the evening, we sat at our table and talked - except for the waltzes, and those we danced every single one.

I know what you're wondering - did he kiss me when he walked me to my door? You'll just have to wait to find out!

CULTURED CORNER

by ANØNMS

THIS PAGE IS TEMPORARILY OUT OF ORDER

REPAIR SERVICE HAS BEEN NOTIFIED!

TECHSTUFF

By VE1VQ

Years ago, I designed and built a power supply to handle the Yaesu FT-707 transceiver I had at the time. The "fun" of having a car battery and a trickle charger under the bench by my feet had somehow lost its appeal! The project was done in stages so I could test and modify to achieve the results I wanted. The low current regulator and circuit protection boards were separate and were mounted to the chassis with edge connectors so that I could experiment with different circuits. The main criteria was to have a well regulated 13.8 volts DC at a minimum of 25 amps of current. Most of the parts were from my junk box while a few others, like the aluminum chassis, the regulator IC, and the output transistors had to be purchased. Ah, the advantage of a well stocked junk box!

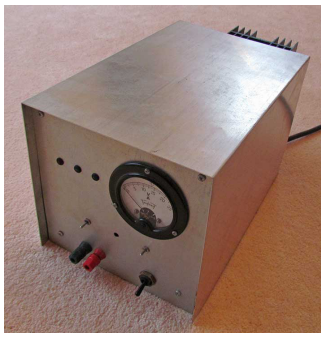

After the parts were laid

out on the chassis and the aluminum cut and drilled, I installed the transformer, capacitor and power diodes, along with the power cord, off-on switch, and a transformer primary side fuse.

The first time I plugged it in to do some testing, everything was fine. But, the next time there was no output voltage. Fuse was blown. Darn fuse! Replace the fuse with a slightly larger one. Again, the fuse blew. After sacrificing a few more increasingly higher value fuses the light dawned and I realized it had to be the capacitor. When I disconnected it the fuse held. Re-connecting the capacitor took out the fuse. Making sure it was discharged and using an ohm meter to test for resistance showed it to be fine.

Can you say, "*inrush current*"? When AC voltage is applied to the transformer primary, it is transferred to the secondary winding, rectified by the diodes and applied to the capacitor. The initial resistance of a 18,000 microfarad capacitor for the first few milliseconds is something close to zero ohms. Fuses just don't like anything approximating a dead short, and are designed to go open very quickly to protect their circuit.

In order to fix the problem I needed to introduce some resistance into the circuit somewhere between the AC

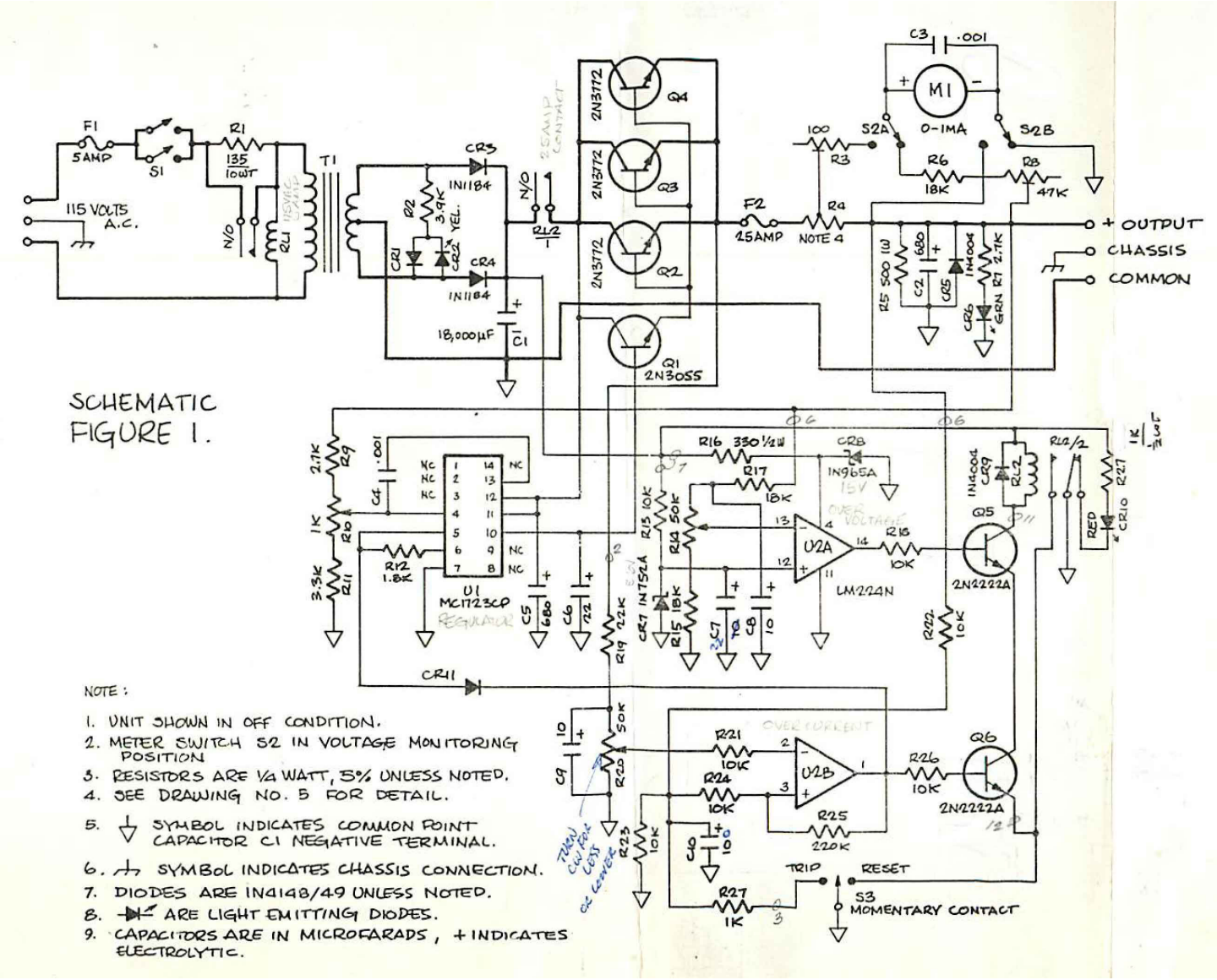

VE1VQ's LINEAR POWER SUPPLY - 13.8 VOLTS DC/25 AMPS. The supply is based on the 723 regulator IC, common in power supply designs of the time. Over-voltage protection and over-current protection is provided by U2A and U2B (LM224 - low power quad op amplifier) respectively, configured as voltage comparators. When either of these conditions occur, the corresponding output pin (of U2A/U2B) will go "low" causing a 2N2222 transistor to turn "off", switching relay RL2 "off", opening the main current path between the filter capacitor and the pass transistors. When this happens, RL2 will stay in the open circuit position until the trouble is cleared and the switch S3 is toggled to the reset position.

input and the capacitor. I chose to add a power resistor in series with the transformer primary. That solved my in-rush current problem but created another in that changes in current draw by the final load would make for very poor voltage stability at the transformer input.

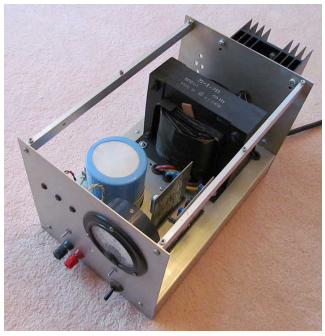

POWER SUPPLY with the cover removed. The 18,000 mf filter capacitor is the blue and silver cylinder behind the meter. To the right of the capacitor are the regulator and protection circuit boards. At the rear is the transformer. The brown wooden wedge sticking into the transformer windings is to quiet a buzz in the laminations.

The solution to that was to add a relay on the primary side to bypass the in-rush protection resistor once the capacitor voltage had stabilized and the in-rush current had dropped to zero.

When you close switch S1, current flows through resistor R1 to charge capacitor C1. At the first part of the current flow, there is a large voltage drop across R1 such that there is not enough voltage across the coil to close relay RL1. As the filter capacitor approaches full charge (approximately a half of a second), the voltage loss across R1 drops to the point where there is sufficient voltage to cause the relay to close. When the relay closes, the contacts short the resistor removing it from the circuit.

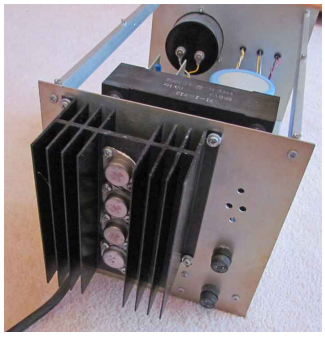

REAR OF THE POWER SUPPLY showing the transistor heat sink and power transistors. The holes to the right of the heat sink are for a driver transistor that was not required. Fuse holders are shown on the lower right - DC output on the top and AC input on the bottom

Other protection I designed into the supply, besides the usual input and output fuses, was over-current to protect the supply if something at the output terminals shorted, and over-voltage to protect the load (my transceiver) should one or more of the output regulator transistors short and put the full unregulated voltage on the output.

These are basic voltage comparators. A sample of the output current converted to voltage (with a low value resistor made from a copper track on a printed circuit board and the resistance of the output fuse) is compared to a value of a regulated DC voltage. It the output current goes up, the sample voltage increases. If this is larger than the preset value the comparator opens a set of relay contacts. Likewise, if the supply output voltage goes over a safe pre-determined value, the over-voltage comparator opens the same relay (RL2) contacts.

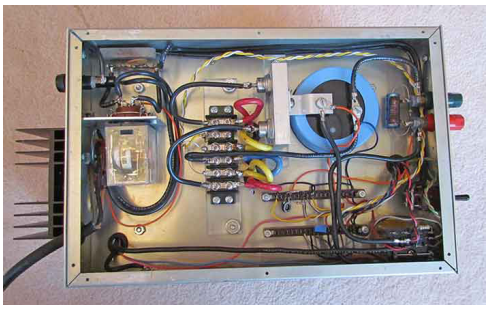

BOTTOM OF THE POWER SUPPLY. The in-rush protection relay RL1 is on the left center side of the chassis. The power diodes are mounted on the bar of aluminum insulated from the chassis at top center. Rectified output is fed by the aluminum strap to the filter capacitor C1. Transformer wiring connections are made on the terminal strip between relay RL1 and the diode heat sink. Relay RL2 is mounted in the lower right corner of the chassis.

There was a lot more that went into the design than is written here, and hours of experimentation. This supply has been in operation and served well for over twenty years. Other than lightning damage a few years back, which took out the inrush relay and the power transistors (even though the supply was switched off), I've had no trouble with it.

Somehow, I didn't quite ever get around to putting a bottom plate on it. Never worried about there being a shock hazard as it sits on a wooden shelf directly under the radio equipment.

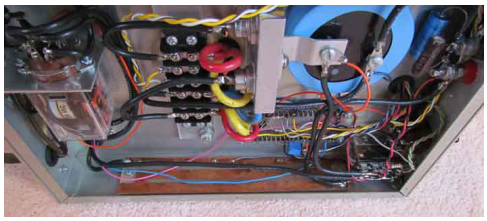

BOTTOM OF THE POWER SUPPLY showing resistor R4 (at the bottom) made from a track on a printed circuit board. This is used as a shunt for the current scale of the 0-1 mA panel meter and for the over-current protection circuit. It isn't easy to see in the picture but it is made of three connected strips etched on the pcb (like a squared number 2). The meter is switched to read either current or voltage.

It is certainly not a light weight power source, tipping my bathroom scale at over twenty-five pounds. Not something you toss into your go-kit backpack on a moment's notice!

Now, with the recent purchase of an ALINCO DM-330MV switch mode power supply, the home brew linear supply will be used as a backup.

This project was a lot of fun designing and building, all those years ago. Haven't had, or needed, a battery under the operating position since!

ALL ABOUT POWER SUPPLIES

PART 2

by JEFF - AI7D
recently retired from Acopian Technical Company

This time, let's talk about AC/DC power supplies, as typically used in the ham shack. Specifically, we can talk about units with 120VAC input and so called "12VDC" output.

The vast majority of cars and trucks on the road today employ a 12V battery electrical system. (even my Nissan Altima Hybrid has a 12V battery in the trunk along with the 245V battery behind the back seat.) Now, when you are tooling down the street, and your engine is charging the battery, the actual voltage is more like 13.8 Volts DC. This is because you are charging the 6 cells in the lead/acid battery, and the current through the battery is monitored. With a typical current used for charging or maintaining the battery, the voltage adds up to somewhere around the 13.8V mark, with some allowance for operating temperature. This means that radio equipment designed for mobile use needs to operate in the 11 to 14-15 volt range. So, your "12" Volt power supply requirement for the shack is more like 13.8 volts, or variable around that value.

ASTRON RS-35M LINEAR POWER SUPPLY with 13.8VDC output. It provides 25A continuous and 35A ICS (Intermittent Commercial Service) and weighs 27 lbs.

Years ago, when tubes were in their prime, ICS used to be termed ICAS or Intermittent Commercial and Amateur Service

The February 2012 QST has an article reviewing four different 25-Amp switching mode power supplies, all capable of operation at 13.8 volts DC. There are additional reviews in the August 2009, July 2006, September 2002, and September 2000 issues.

So, we are talking about a single output, 13.8V regulated power supply which can operate from zero load to something around 25 amps max. This would power a 100W low band rig, as well as some other small radios, such as VHF or UHF, and maybe a few accessories too.

Most of the time, using SSB, the power supply will be running at very low load, maybe close to zero. When you transmit on that alleged 100W rig , especially key down on CW or talking on 29.6 MHz FM on 10 meters like I used to do, you are drawing maximum current.

AC input is normally 120VAC, +/- 5% or 114 to 126V, and in the US, Canada, and Mexico, that would be 60Hz. If you are in the ham shack, you should normally have no problem. If you are operating with a generator, either during a power outage, or during field day, you might find higher or lower voltage, as well as some frequency variations.

OK, which type of power supply is right? If you want to buy a power supply, and have a friend who has one, ask about them how they like it.

"Switchers" are smaller, with higher efficiency, able to operate with a wider input voltage, (some will operate at 240VAC also), and some have power factor correction which lowers the input current, (not the efficiency). Switching supplies may cause problems with the harmonic content showing up as "birdies" (false or spurious signals), in the receiver of a HF rig. This noise is either in the DC output itself, or is radiated from the line cord and input power wiring.

ASTRON SS-30M SWITCHING POWER SUPPLY with 13.8VDC output. It provides 25A continuous and 30A ICS (Intermittent commercial service) and weighs 5 lbs. ASTRON's web site is http://www.astroncorp.com/

"Linears" are much larger, heavier, put out more heat, cannot operate from wide AC input voltages, often have more limited voltage adjustments, but they produce essentially no electrical switching noise. That can be important. Recording studios and radar equipment have employed this type of power supply for many years for the lack of electrical noise.

Meters, adjustments, on/off switches might be helpful too. A bench top unit might be better for your shack instead of a modular unit. Location and type of output [connectors] can be a consideration to think about also.

"...radio equipment designed for mobile use needs to operate in the 11 to 14-15 volt range."

Over-voltage protection is important. If something goes wrong with a linear unit, or you open the remote sense leads (if they are available), or certain types of failures in a switching unit, you might have 20 volts or more at the output terminals of the power supply. This

might damage your precious radios.

I have ignored unregulated and other types of voltage regulated supplies for this discussion. Switchers and linears are normally better suited for “12V” ham shack use.

As before, any questions or suggestions would be appreciated.

Jeff - AI7D

Jeff can be reached at ai7djeff@ptd.net

CONTEST UPDATE

This contest has sort of taken on a life of its own, with people on the reflector and in direct e-mails suggesting various changes. All excellent ones, but requiring more work on the part of someone. Unfortunately, it can't be me as I have enough in life to do already. I asked on the reflector, if anyone was interested in taking charge, but no volunteers were forthcoming.

My question to anyone interested in the contest is this - do you want to participate in the contest, not to administer it but simply to operate in it under the original rules, which were contacts between LDS operators only? If enough folks want to do the contest this way, I can handle the paperwork and the certificate preparation and disbursement. Please contact me at *ve1vq@eastlink.ca*

And, should anyone want to be the contest administrator or to help in any way, the above e-mail address will still work!

LDS AMATEUR RADIO PIONEER DAY JULY 21, 2012

There's been some talk on the reflector about a Field Day contest of sorts. The suggested date is 21 July (Saturday prior to Pioneer Day on the 24th) and the suggested operating time is a four hour block out of the seven hours total.

This will be open to all LDS radio amateurs.

Frequencies and rules will be published when they are finalized.

QUOTE OF THE MONTH

•If anything can go wrong, it will.
•It will do so at the most inopportune time.
•It will be all your fault, and everyone will know it.

~ Murphy's Law

DI-DAH-DI-DAH DIT

Back in January, I had to order a new key switch for my generator. All I really needed was a working spare key, as the copy of the original key didn't turn any more. None of the key cutting places had the un-common key blank to make one. The only locksmith in the area died a few years ago and it seems there isn't enough business to attract a new one. I tried to get one from the manufacturer but they don't use that key switch and key any more. So there was nothing to be done except to replace the switch with a new one.

Exact replacement I was told. Simply transfer the wires from the terminals on the back to the ones on the new switch. That part went well enough. There was a little difficulty getting the wires and ring terminals into position and starting the retaining screws in the cramped space but, eventually, it was accomplished.

The real trouble came when I had to mount the switch on the operator panel. The retaining nut would barely start

on the switch housing threads, and when it was tightened slightly, would drop off. Closer examination disclosed that the threaded portion was a teensy bit shorter than the original. In most cases this would not have been a problem, except my generator has a user control panel of 1/4 inch thick plastic!

This was all taking place in my unheated, drafty barn with the temperature somewhere below freezing, and the sun about to disappear behind the trees to the west. I thought about leaving it until the next day but that was Sunday and I really don't like working on the Sabbath unless it is an emergency. Since this was of my own making and poor timing by waiting until late into Saturday afternoon, I wasn't sure that was a good enough reason. On the other hand, I don't like being without a generator at this time of year, because when it fails it's usually off for several days. What to do?

Fortunately I remembered my DREMMEL tool. This is one tool that I don't use all that often but when I do, it really comes in handy. Luckily I knew where to find it! (*My mother always told me that if I put things away when I was finished using them, I would know where to find them the next time when I needed them* - thanks Mom!). The tool box revealed that I had a burr suitable for cutting plastic (see inset). My luck was holding and I was able to find an extension cord of suitable length to provide power. In a few minutes, I had removed enough material and the key switch was mounted on the panel. Check the wiring one last time, connect the battery, turn the key, and the sweet sound of a generator running confirmed the end of another successful Saturday afternoon project.

The first thing to remember is this - you can never have too many tools! The second one is to start Saturday jobs earlier knowing that Murphy is prone to cause things to always take longer than planned.

Until next month,
VE1VQ

Pictures and Words

How about sending a picture of you and your station? If so inclined, send me a bit of a write-up about your ham radio career. And if you have one, send me a copy of your QSL card.

You're thinking, "no one wants to hear about me!" That's not true because everyone has an interesting story to tell.

Send it to VE1VQ@eastlink.ca in whatever format you want - even scribbled in pencil on a piece of paper.

ARRL Field Day is June 23-24, 2012

ARRL Field Day is the largest on-the-air operating event in Amateur Radio. It draws tens of thousands to the airwaves each year, bringing both new and experienced amateur radio operators together for a weekend of fun!