The NEWSLETTER

SEPTEMBER 2013 VOLUME 13, No. 8

Mercury Amateur Radio Association - MARA

North America - North East

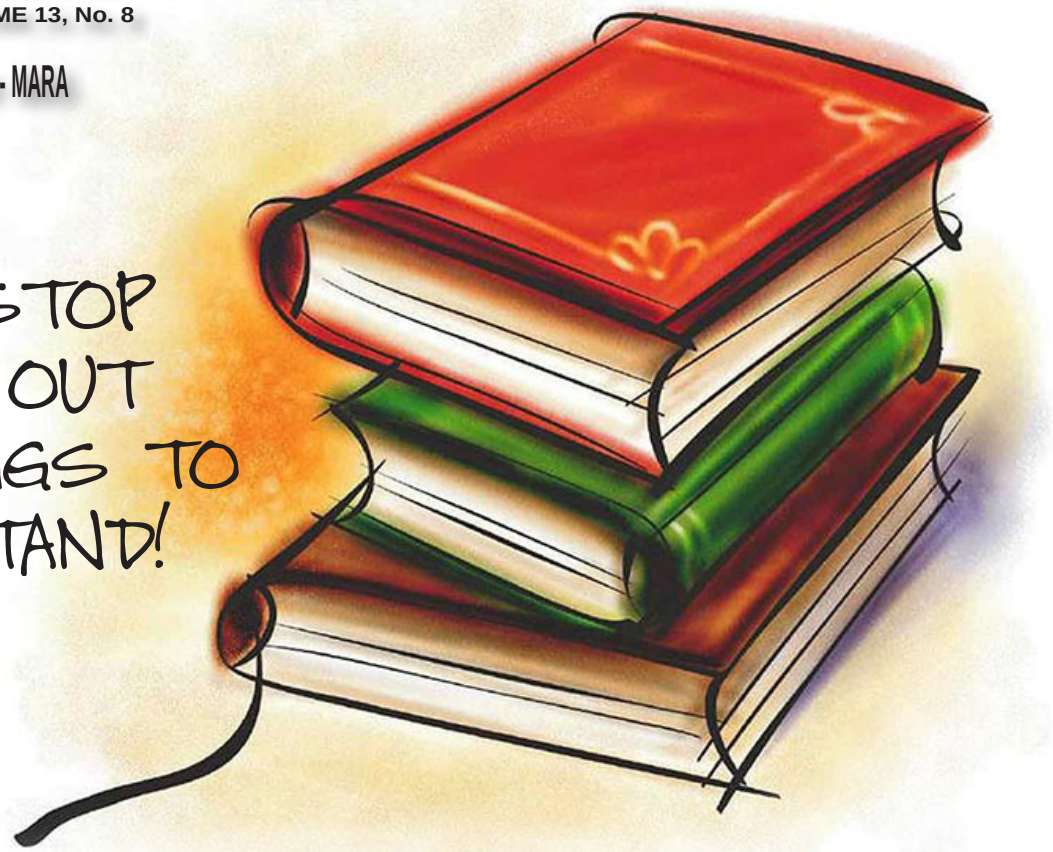

NEVER STOP SEEKING OUT NEW THINGS TO UNDERSTAND!

CONTENTS

OTHER STUFF

*Links that will take you to web locations referenced in this newsletter are shown in **BOLD blue text**.*

E-mail your comments, ideas, or submissions to marane@mara.net or to ve1vq@eastlink.ca

Grandma Mara's RAMBLINGS

We're back!

Walter and I had a great time on our honeymoon. No appointments to keep, no alarms to set, no cell phones to answer, no one to worry about but each other. We didn't make it back for Field Day, but we lucked into a very last minute cancellation at a park/campground near Freeport, Maine. We were told when we stopped at the park office on the Friday (before FD) that they were full up for the entire summer, but as we were walking out, the phone rang, and the staff lady caught us before we could drive away.

Walter even managed to get an inverted-V antenna up, using his slingshot and the site's conveniently located trees (which were not nearly as tall as back home - something to do with the effect of the salt from the nearby ocean, and the colder winters), to use with his **QRP single sideband/cw rig** and low power homebrew tuner out on the picnic table. He spent more time demonstrating it to the kids from neighboring campsites than he did making actual contacts on his own, but all of them seemed to have fun talking on the air. The vast majority of the people they contacted were more than happy to stop the numbers race and take the time to chat with a curious child about the hobby. Might even have made some converts, as several of those who stopped by came back later with their parents or grandparents to see "the radio man". Or maybe it was the plate of cookies I kept refilling out on the table!

Live lobster. The bands are to keep it from clamping onto unsuspecting fingers or other lobsters while in storage.

A cooked lobster. The cook cuts the bands off and drops them (the lobsters - not the bands!) into a large pot of boiling water. After a few minutes of cooking, they turn red.

There are lots of restaurants in Maine serving lobster; even some who would deliver complete cooked meals to our campsite! Suffice to say that while we were in Maine we had lobster for dinner about every night.

Neither Walter and I are much for shopping as a hobby, but we did visit the L. L. Bean store in downtown Freeport. They have the cleanest, freshest bathrooms I have ever seen. Afterwards, we had ice cream cones at Ben and Jerry's just down the street.

We kept in touch with our family members and Wendy and her family by e-mail, at times when we chanced across an open access site (McDonalds and a lot of the other fast food places, and the major coffee outlets are good places for free access - you don't have to eat or drink the stuff, just park close to the building!), to let them know where we were, in case anything urgent came up. Thankfully nothing did.

Like I said, we had a great time getting to know each other. We didn't fight about squeezing the toothpaste tube (bottom or middle), or the position of the toilet seat cover (up or down), or nonsense like that. We both agreed we were likely "a match made in heaven". AR

SOLAR POWER

by Rick - VE3ATM

MY BASIC SOLAR CHARGE SYSTEM FOR EMERGENCY COMMUNICATIONS - PART 2

Materials list:

2 - **SUNPOWERLINK** 100W solar panels purchased through eBay. They use the German made Q-cells. You can do an Internet search for more details on the Q-cells.

1 - **DURACELL** Absorbent Glass Mat Deep Cycle Battery model 31DTAGM

1 - **MORNINGSTAR** SunSaver MPPT Charge Controller (it will accept up to 3 solar panels in series and will then charge either a 12V or 24V battery. It autosenses the battery voltage. There are a number of different settings for different types of batteries.

1 - MORNINGSTAR RM-1 meter.

100 - foot, 10 gauge with dual insulation solar extension cord with the appropriate MC-4 connectors to mate with the connectors on the panel. I cut it in half for the + / - cables to the basement.

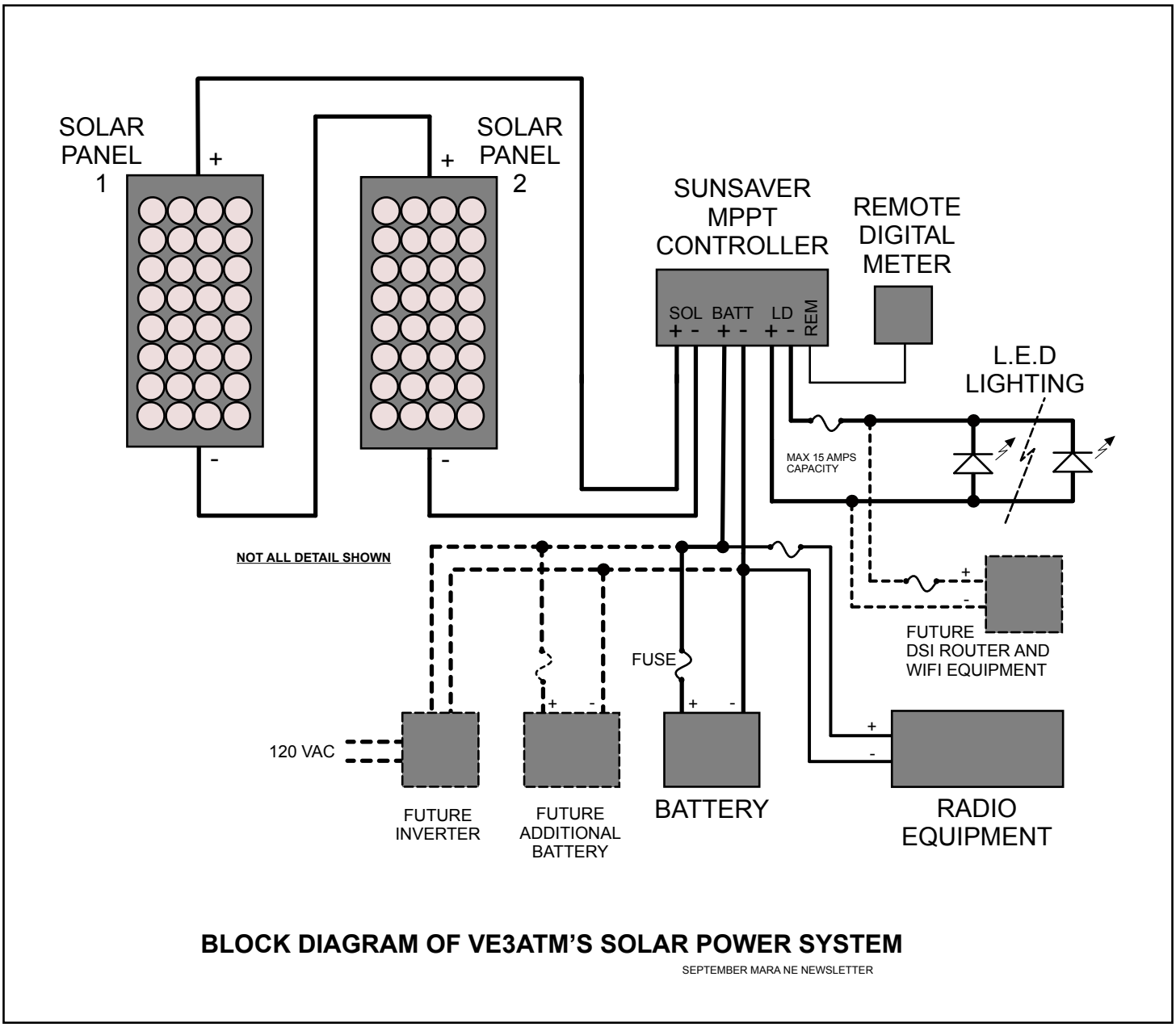

10 - 7.5W LED strip lighting.

The mounts, paint, etc. cost me approximately $200, so the total project was just under $1000, but since installing I have not used my basement lights in the area where I spend most of my time, or the basement washroom where we all shower each day as we have an old claw foot tub upstairs without a shower. It will take a few years for pay-back, but my primary purpose for this was emergency lighting and Ham Radio operation.

I will soon be connecting up my DSL router (12V, 1 amp) and Wi-Fi router (12V, 1 amp) so when the power goes out we will still have Internet on our portable devices.

Power for the TS-590 and the TM-71V uses a direct connect to battery as the draw is greater than 15 amps when I transmit. I will also be connecting a second battery in parallel with the first one and adding a 300W inverter in the future to supply our on-demand hot water heater.

For more information about the installation, contact Rick at ve3atm@hotmail.com

VE3AM's roof panel installation.

SILENT KEY
K3DEY

It is with a heavy heart I announce the unexpected but peaceful passing of Board Member Jeff Niceler, K3DEY last Saturday evening (20 July 2013) at home. Jeff and I were best friends and frequent traveling companions; he will be very much missed. Your prayers for his wife, Laurice KB2QLN, and extended family are appreciated.

The viewing and the funeral were in Bensalam, PA Thursday evening and Friday morning (25th and 26th), at the Tomlinson Funeral Home.

Bruce, N3IA

LDS FIELD DAY

Monte, VE6AYU is proposing a Canadian LDS Field Day for ERC and MARA members on Saturday, the 7th of September beginning at 4 p.m. MDT and running until around 8 p.m. MDT, or until there are no more stations to talk with.

Suggested frequencies are:

20 meters: center around 14.244 MHz
40 meters: center around 7.181 MHz
80 meters: center around 3.878 MHz

To register or for more information, please contact him at monte.thomson@gmail.com or by phone at 403-758-6324.

GENERATOR WOES

by a contributor, who for job related reasons, requests anonymity until retirement.

FIELD DAY AND GENERATOR WOES

Field day was problematic. I drove down to North Carolina the Thursday before Field Day to rest up prior to the start of the marathon run. Saturday it started raining steady and hard at 1:30 p.m. I pulled the Honda generator from the garage at 2:00 p.m. and the cart which I use to move the generator had a flat tire. Pulled the mini air compressor and inflated the tire. Fortunately the problem was a slow leak. Pulled the cart across the yard in the rain and upon start time turned the key to startup. Usually about 20% choke allowed a quick start but had to pull the choke all the way out to get it to hit. Fortunately the Honda is electric start otherwise I would have pulled the shoulder out of the socket. Upon reducing the choke, the engine shuts down. Restart and find the choke has to be set at 80% or greater to keep the engine running. UH-OH!

Pulled out the backup (McCullough) and it will not start.

Pulled out the backup (McCullough) and it will not start. Finding this I ran with the Honda so did not use the amp. I had thought of using the McCullough with the Henry Amp and the Honda (with integral power inverter) for operating the Yaesu rig's power supply. Given the number of problems plus I had not tested the amp-rig combo for adjacent channel interference, the use of the amp was abandoned. The inclement weather continued through the day, the night and into Sunday. The outside temperature stayed above 80 degrees right through the night. With 100% humidity my initial attempt to service the carburetor problems quickly withered. Operation was intermittent. Contacts totaled seventy-six and none were identified as LDS.

Contacts totaled seventy-six and none were identified as LDS.

I took the generators to a shop on Monday morning and dropped them off. Tuesday afternoon the shop called to say they had repaired the Honda but needed authorization from me to order and replace the carburetor on the McCullough. The carburetor was $135.00 plus labor. The generator was only $500.00 new. I deferred on the McCullough as it was sixteen years old. It still ground on me that it had no more than 30 hours max run time. Arrrgh.

Paid the service charges on both generators and took them back to the house. The Honda carburetor had gummed up the jet. This was despite running the carb dry when storing and using an additive stabilizer with the gas.

I brought the McCullough back to Virginia and removed the carburetor. Disassembling the carb, I found a white powdery residue which was corroded aluminum. A rebuild kit with new float, valve and seals was ordered and delivered the next day. I soaked the carb body in cleaner overnight which dissolved the most of the corrosion. Some more persistent spots required application of a small wire brush. The solvent was washed away with water and then dried with compressed air. Ports and vents were checked for patency. Re-assembled the carb using the rebuild kit, and installed the carb back on the motor. I then drained the gas from the tank and noted there was some solution separate from the gas. (I had just refueled the generator the month earlier as I stored them dry). I purchased a couple of cans of **Dry Gas**. The plastic tank was removed, petcock closed and Dry Gas poured into the tank. Sloshed it around and poured it out into a mason jar. Ugggggghhhhh! Not pretty. Lots of globules of gunk. Went to Lowes and bought a gallon of denatured alcohol. Added a quart to the tank and sloshed again. Again more gunk but much less. It returned clear on the last wash.

Disassembling the carb I found a white powdery residue...

Re-assembled the generator, but this time I used straight up gasoline as opposed to the normal 10% ethanol blend sold at most gas stations. Added gas, opened the petcock, waited a couple of minutes for the gas to filter down the new lines and filter, pulled the cord one time and Voila! Starts first pull. Idles nicely.

I had previously read that ethanol blend fuels are pretty rough on fuel systems which are not run on a daily basis. Apparently even worse when you run the carb dry, you run the gas dry but water picked up by the ethanol is not all removed from the carb bowl and various orifices. It remains there to facilitate corrosion from another insidious problem with gasoline. Stored

...this time I used straight up gasoline as opposed to the normal 10% ethanol blend sold at most gas stations.

fuel apparently oxidizes. Fuel systems are vented to the atmosphere thus there is a continuing source of O_2 to facilitate the oxidation of fuel left in the tanks. The oxidation with water collected over time by the hygroscopic alcohol in the fuel creates acids that attack the carb parts.

OPTIONS

It seems to me there are a few options for gasoline powered generators:

1. Locate a supplier of straight gasoline as opposed to the pervasive 10% ethanol blend. I found three stations in the city (of 50,000 people) that sell straight gasoline. One is a bait and tackle shop which offers the fuel for gasoline powered marine equipment. The second is a small Mom and Pop rural country store that sells fuel, soft drinks, bread, milk, etc. Their fuel sales are low volume. The alcohol being hygroscopic poses a problem given the extended storage compared to the higher volume urban stations. A third station in the city operating adjunct to a car wash also has low volumes and similarly due to the low volume sales offers straight gas.

1. Locate a supplier of straight gasoline as opposed to the pervasive 10% ethanol blend.

2. Shut off the petcock religiously and leave the carb wet using straight gas. You will need to run the generator at least once a month other wise the excessive heat found in exterior storage environments will boil off the lighter distillates in the fuel leaving you with a witches brew of heavier gasoline components which do not vaporize as easily, gums which form from breaking down gasoline and the normal contaminants which accompany fuel. The small amount of fuel that will leak down from the carb through the engine into the oil is a minor item in my opinion, as I change the oil religiously at least once a year. If the generator is used for an actual event I change the oil post event so in general the oil is changed twice a year.

2. Shut off the petcock religiously and leave the carb wet using straight gas.

3. Shut the petcock off, run the generator till the engine stops when the bowl drains and take your chances that gums already formed in the gas do not leave corrosive compounds and goo which clogs the jet orifice and sticks the pin valve. I like this least.

3. ...run the generator till the engine stops when the bowl drains...

4. Use the additives suggested by numerous small engine shops. However both generator manuals, plus manuals from other small engine manufacturers for weed-eaters, hedge trimmers, lawn tractors all explicitly mention use of such products will void the manufacturer's warranty.

4. Use the additives suggested by numerous small engine shops.

5. Modify the generator to incorporate a drain petcock so the generator tank can be drained. This is my next step. I will use the wet carb method and practice safe carburetor rules running the machine once a month religiously. Following the run up I will drain the fuel tank. Also I have decided to keep five gallons of straight gas on hand. Every five to six weeks what has not been used will be cycled through the cars and the five gallon container refilled. It is not clear to me that the plastics in the tanks are not adding to the brew so keeping the tanks dry will eliminate this possibility.

5. Modify the generator to incorporate a drain petcock so the generator tank can be drained.

I hope. AR

How About It?

Did you get a piece of ham equipment for a birthday or as a "self-gift"? Write up a little piece describing how it worked (or didn't work!) for you.

Send it to VE1VQ@eastlink.ca in whatever format you want - even scribbled in pencil on a piece of paper.

TECH AND OTHER STUFF

by VE1VQ

THE FIBERGLASS POLE ANTENNA

The first weekend in August was a sort-of-holiday here, north of the border. Not like Christmas where everything shuts down, but one where government work places (now there's an oxymoron for you!) and banks are closed, so all those people can have a three-day weekend to go shopping.

The antenna stand made from recycled wood trim.

Since it was foggy and wet on Saturday, and I couldn't mow the lawn, I made up a stand for the fiberglass pole antenna out of some recycled interior wooden door trim. There's nothing special about the size, just wide enough of a footprint (24 x 24 inches) to keep it upright on reasonably level ground and still be able to fit it into the rear of my Honda CRV. One of these days, I might even get around to painting it.

TESTING, TESTING!

Monday, the weather was sunny and dry, with a slight breeze. Just the right kind of weather to do some antenna testing. The antenna stand was placed in the field away from buildings and power lines.

I started out with the top wire section looped through the eyelet at the top of the pole and spiraled downward. Resonance occurred at 6.631 MHz. Once I figured things out, I let the coil form sit on the top edge of the pole section that was slightly larger than the interior diameter of the form. After a couple of attempts, the radiating wire element was wound with a twist of one turn approximately every four inches for the top section and about one per twelve inches for the bottom. The end of the top wire section ended up forty-four inches down from the tip of the top section. Resonance can be adjusted by lengthening or lessening the spiral of the top wire. Longer is lower in frequency. The radials were attached to the PVC radial connection box, and a 66 foot length of RG-58 coaxial cable (nothing special about the length, just something I had on hand that would get me past the ends of the radials) was strung out over the grass to the RigExpert AA-230 antenna analyzer.

The hoped for stability of the antenna stand tumbled to the ground with the first wind over a mild breeze, falling over almost in slow motion.

The hoped-for stability of the antenna stand tumbled to the ground with the first wind over a mild breeze, falling over almost in slow motion. A few rocks solved that problem. Small sandbags, the kind Walmart sell in the winter to put in your vehicle's trunk for added weight and increased traction, would be even better. Here in Nova Scotia, rocks are usually an easy to find substitute!

Once the kinks were worked out, and the radiator winding was done as previously mentioned, the resonant frequency rose to 7.15 MHz with an swr of 1.04. The band edges of 7.0 and 7.3 measured 1.5 and 1.4 respectively. This was with eight tape measure radials. The low swr spot on 15 meters was around the top edge of

the band, which was to be expected. I didn't spend much time on that band other than to note where the resonant point fell. Other bands didn't get examined at all. That's all something for another day.

Not counting the various winding trials to figure out what would work, it took about a half hour to set it up.

- Extend the pole horizontally,
- Wrap each joint with electrical tape (to keep it from collapsing under its own weight),
- Slide the coil down over the pole,
- Wind the top section and the bottom section,
- Attach the bottom end to the PVC box,
- Attach and unwind the tape measure radials and,
- Connect the coaxial cable.

MORE ARE BETTER

As a matter of interest, the first test with the sweet spot at 6.631 MHz and an swr reading of 1.02 was with eight radials. Reducing that number to four dropped the resonant point to 6.553 MHz and an increased minimum swr of 1.34.

I suspect the reason for the nice, reasonably flat swr curve of the final antenna configuration was because only eight radials were used. Doubling that number, should cause a narrower curve and increase the swr at the band edges. That would be a good thing despite what you may think. Dummy loads have a nice flat swr over the high frequency range, but they don't make very efficient antennas. Using more radials makes for better efficiency, less loss resistance, and more power radiated from the antenna. Extra radials come at a price, and you have to decide if more are cost effective for you. Eight are the minimum I would use.

Dummy loads have a nice flat swr over the high frequency range, but they don't make very efficient antennas.

Originally, when I made the radiating wire and coil, I did allow extra length for the top section but during these holiday tests, I trimmed it back to the 4.7 metres specified in the original article. Resonance may be adjusted by varying the length per turn of the top radiator section. A longer (taller) top section translates into a lower resonant frequency.

MORE TO COME

The next experiment may be the addition of another eight radials to see what that will do to the resonant frequencies and the swr curves on 40, 30, and 15 meters. After that, I want to try a thirty-three foot radiator, without the center loading coil, wrapped abound the thirty-one foot pole. Then, I'll try adding a short piece of wire with mating connectors to the bottom of the 40 meter antenna to bring the 15 meter band resonant point into a better (lower resonant frequency) spot.

I hope the weather cooperates! AR

QUOTE OF THE MONTH

"There is no end to education. It is not that you read a book, pass an examination, and finish with education. The whole of life, from the moment you are born to the moment you die, is a process of learning."

Jiddu Krishnamurti

How About It?

How about sending a picture of you and your station? If so inclined, send me a bit of a write-up about your ham radio career, and if you have one, include a copy of your QSL card.

Send it to VE1VQ@eastlink.ca in whatever format you want.

DI-DAH-DI-DAH

For years it has been assumed once you reached middle age, it was all downhill from there. Your physical skills declined, as did your mental acuity. Forget about your ability to learn new things. Wasn't going to happen. And that was the prevailing attitude amongst the academics.

> "The idea that the mind fossilizes as it ages is culturally entrenched. The phrase "an old dog will learn no tricks" is recorded in an 18th century book of proverbs and is probably hundreds of years older." [1]

Now, this attitude is changing and studies are pointing

in another direction altogether (and where have we heard this before? - seems like a lot of what we once knew as a certain thing is now the one-eighty degree opposite!). Turns out that the older studies indicating we has-beens were on the downhill slope were done with incorrect methods! Imagine that, the study experts being wrong!

More recent studies with different methods indicate that we are (or may be) actually better at learning than children and younger adults.

> "During a more challenging test of hand-eye coordination, nearly 1000 volunteers of all age groups learned to juggle over a series of six training sessions. As you might expect, the senior citizens aged 60 to 80 began with some hesitation, but they soon caught up with the 30-year-olds and by the end of the trials all the adults were juggling more confidently than the 5 to 10-year-olds." [2]

The article quoted from, indicates that as seniors, we learn differently from when we were younger. Rather than concentrate on a narrow and particular skill, we should be varying what we learn. For instance, if we are trying to learn basketball, we should not concentrate only on tossing baskets or only learning to dribble, but vary our practice sessions, and not get hung up on perfecting one particular thing.

If you have decided that you simply cannot learn CW, but still have the desire, maybe you need to try a different direction. Change up the study sessions, perhaps do it for shorter periods and do more of them. If you can, have a friend test you occasionally, or find an on-line site to do it for you, and use it often.

> "...children are continually quizzed on what they know – and for good reason: countless studies have shown that testing doubles long-term recall, outperforming all other memory tactics. Yet most adults attempting to learn new skills will rely more on self-testing which, let's be honest, happens less often." [3]

How About It?

Do you have an idea for an article you think you might like to write, but not sure if you can?

Send your thoughts to VE1VQ@eastlink.ca and together we'll work on it.

Contesting!

Is there anybody out there active in contesting - either CW, SSB, or digital - who would like to write a basic how-to article (or series of articles)? Even from a beginner's point of view.

Drop an e-mail to VE1VQ@eastlink.ca so we can talk about it.

Some years ago, when IBM PCs were first becoming popular and available to the general public, my brother-in-law's wife's grandmother lived in a senior's home. She wondered what all this computer stuff was about, so she ordered a PC and the stuff that went with it. She mentioned her purchase during a phone conversation with her grandson, who was an engineer. He offered to come over and connect it up for her. She thanked him but told him that she should be able to figure it out. And she did! Not only that, but she started teaching computer classes in the home to other interested seniors.

Perhaps we're not so dumb after all, and maybe experience counts for something. Take that, you young whippersnappers!

Until next month,

VE1VQ

[1, 2, 3] **http://neurosciencestuff.tumblr.com/post/51428289471/old-schooled-you-never-stop-learning-like-a-child**

Looking for...

Someone who has recently leaned the code. You can be a wet-behind-the-ears code practitioner or someone who has been on the air for several years. We're looking for an article (or articles) for future newsletters on your experiences in learning the code.

Send an e-mail to VE1VQ@eastlink.ca with your ideas.