The NEWSLETTER

MARCH 2015 VOLUME 15, No. 3

Mercury Amateur Radio Association - MARA

North America - North East

MARCH

It will soon be antenna weather again.
It might not seem like it now,
BUT IT WILL ...

EVENTUALLY!

CONTENTS

OTHER STUFF

Links that will take you to web locations referenced in this newsletter are shown in **BOLD blue text.**

E-mail your comments, ideas, or submissions to marane@mara.net or to ve1vq@eastlink.ca

Past issues of The NEWSLETTER may be viewed at **http://ne.mara.net/newsletters.htm**

FEATURE ARTICLE

by a contributor who, for job related reasons, requests anonymity until retirement.

Ground Mounted Vertical Antenna vs Elevated Dipole Performance

Many of us have tried over the years to utilize Vertical Antennae with varying and very inconsistent degrees of success. Compounding the problem is misunderstanding about dipole performance over ground versus free space. This article will identify and describe differences in the two antennae performance, identify operational conditions for optimum performance, and hopefully clarify for ops the reasons for disparities. In particular, anomalies (real world application vs theoretical models) of dipole design and installation will be examined to reveal a source of error when comparing dipoles and vertical gain characteristics.

Reference Antennae

While the universal standard presented in texts for the baseline theoretical reference antenna is the isotropic model, the model cannot be realized in the lab. It is a convenient abstract with a perfect spherical radiation pattern in Free Space[1]. By convention it has been established that the isotropic antenna exhibits 0 dBi[2] gain.

The real world antenna almost universally utilized by professionals and amateurs as a metrology lab standard is the dipole antenna. This is due in part to the ease of construction of the antenna, repeatable performance and the abundance of academic information where scientists have established that the theoretical model and real world performance match.

While amateurs can utilize a laboratory standard Hertzian Dipole[3] , it greatly simplifies life by using a Resonant Dipole of ½ λ. The Resonant Center Fed Dipole is well known to exhibit a midpoint resistive impedance of 72 Ω (72 +j0.0) and a gain of 2.1 dBi (2.1 dB over the isotropic model) in free space. Dipole Antennae are used as references with the baseline gain spec of 0 dBd being used to define the dipole so that more complex antennae such as Yagi, Log Periodic, Phased Array etc can be compared to an antenna with familiarity. Manufacturers frequently specify the gain of their antennae using both dBi and dBd units with the lower case "d" in dBd denoting the value is referenced to a dipole.

Free Space Models vs Real Life

Keep in mind that the reference values established thus far are based on the antenna being used in Free Space. Real world conditions dramatically change the radiation patterns of both verticals and dipoles when placed within a wavelength of the earth. The following examples will demonstrate those effects and why the often maligned Vertical Antenna seemingly is an attenuator when compared to the dipole.

Quarter λ Vertical Radiation Power plots & Gain

The ¼ λ vertical is often used as a reference. The calculated radiation patterns are shown below with associated expected gains. The vertical radiation plot displayed in Figure 1 is based on the ground below the vertical

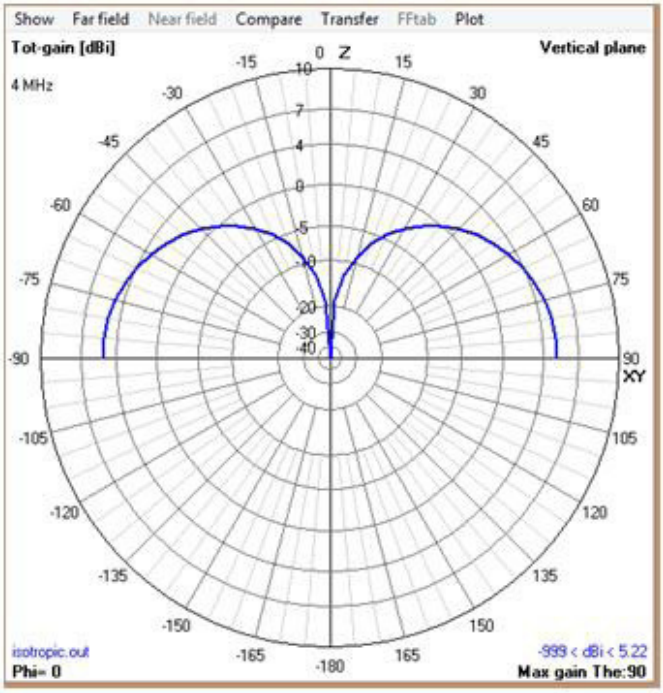

Figure 1 – ¼ λ vertical over perfect ground at 3.8725 MHz

---

[1] In general most labs accept that isolation of an antenna by 10 λ physical distance from potential reflectors, absorbers and other interferers is sufficient to allow an antenna to approximate operation in "a Free Space Environment". Consider your 10 meter antenna would need a minimum of 10 λ or approximately 328 feet from any reflector (such as the soil or floor beneath it), buildings, trees, autos, aircraft etc) just to approximate free space. In general this is not practical for most budget limited amateurs or labs.

[2] 0 (zero) dBi is a reference value for many antennae which you are likely to encounter. It simply indicates the model represents "Unity" gain. The lower case "i" denotes the value is referenced to the isotropic model.

[3] Hertzian dipole in this case is defined as being less than 1/50th λ in length and driven at the midpoint.

being perfect. Note the pattern symmetry and associated gain.

In Figure 1, the gain of the antenna at low angles of radiation is the peak radiated power point on the plot occurring right at the -90° and +90° points. The vertical with a perfect ground offers a theoretical gain of over 5 dBi. In the real world we will need to deal with real earth ground which incurs losses. The plots below utilize real earth ground for simulations.

Comparing Figure 2 to Figure 1 reveals that the gain over Real Earth (moderate conductivity) as opposed to Perfect Earth Ground is lower by over 7 dB. The Earth conductivity is such that over 75% (> 6dB down or 1 S-Unit) of the RF power incident at the antenna is dissipated as heat in the ground even though the model used had four earth mounted radials[4]. If no radials had been used the losses would have been even worse. Increasing the number of radials from four to eight improves matters[5].

Let's divert for a moment to discuss VSWR and point

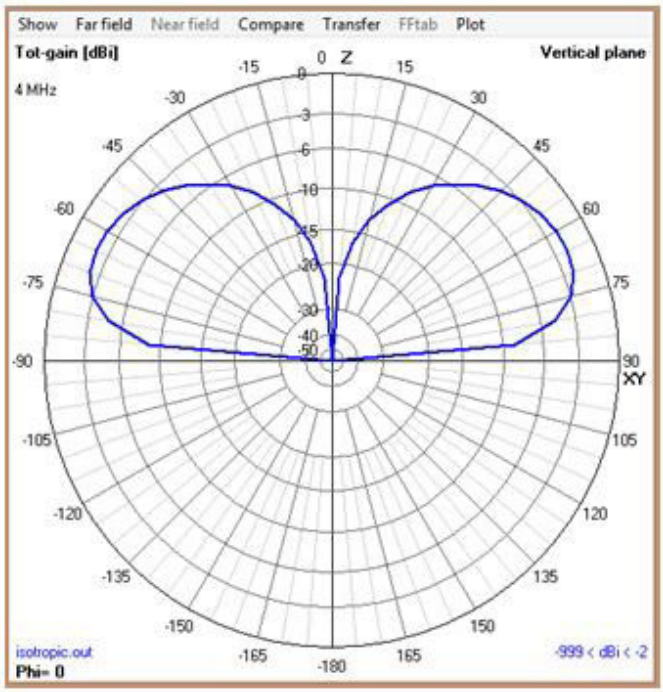

Figure 2 – ¼ λ vertical over Real Ground (moderate conductivity) at 3.8725 MHz

out that while it can be a useful indicator of antenna performance it does not prove your antenna is radiating efficiently. The vertical we modeled with four radials over a moderate earth exhibits a projected VSWR curve as shown in Figure 3 at the top of the next column.

[4] A raised vertical where the ground is at least 1/10 **λ above actual ground using only four radials will exhibit about three to five dB less loss.**

[5] See the note at the end of the article on page 5

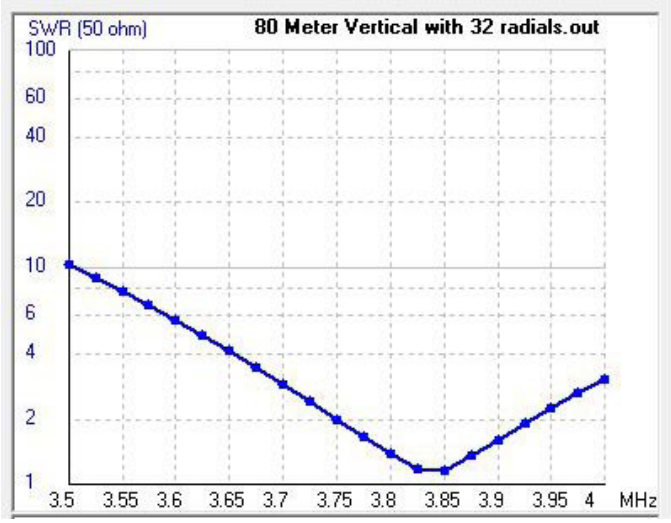

Figure 3 – VSWR vs Frequency for ¼ λ vertical over Real Ground (moderate conductivity) at 3.8725 MHz

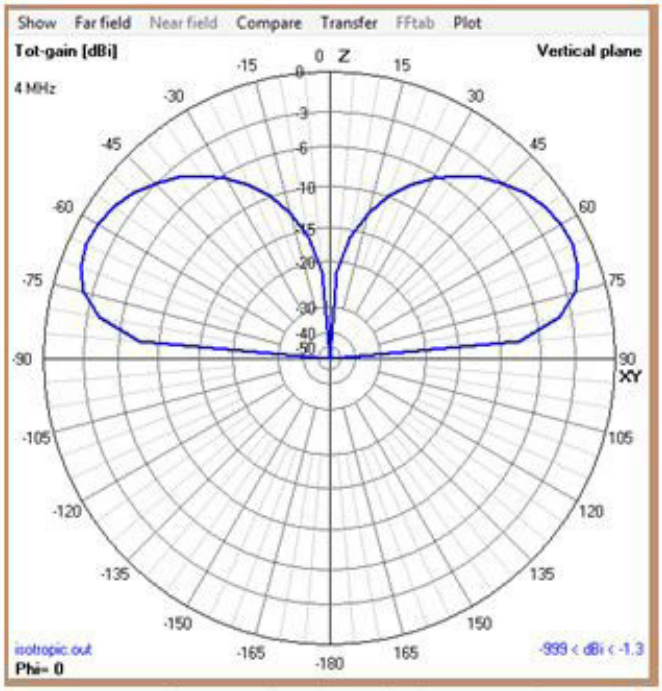

Figure 4 – ¼ λ vertical with 8 radials over Real Ground (moderate conductivity) at 3.8725 MHz

While a low VSWR is desirable [to avoid stress on your transmitter or linear amplifier devices - Ed], it should not be construed as an indicator of the antenna's ability to radiate.

Returning to the number of radials and their effect on radiated power, the plot displayed in Figure 4 is the result of increasing the number of radials from four to eight. The vertical gain rises from -2 dBi to -1.3 dBi. In Figure 5 the number of radials is increased from 8 to 32. A slight improvement is noted of about 0.2 dB thus the peak power radiated is -1.1 dBi.

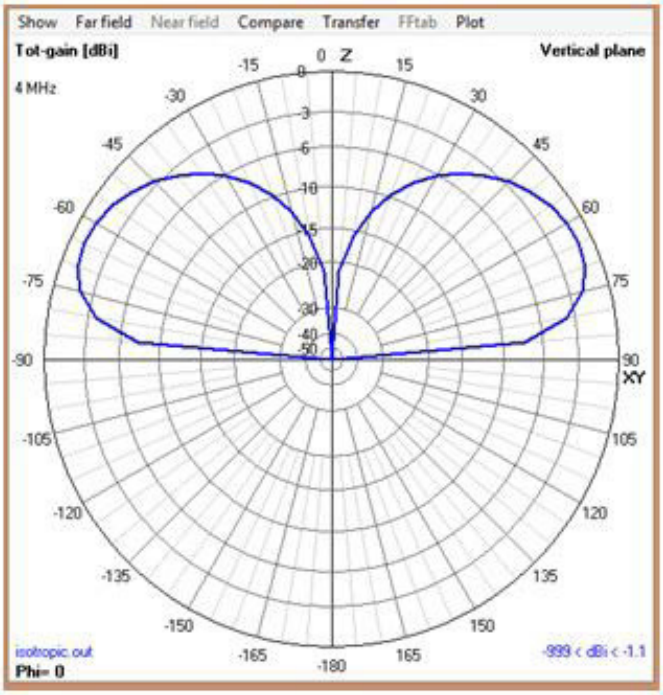

Figure 5 – ¼ λ vertical with 32 radials over Real Ground (moderate conductivity) at 3.8725 MHZ

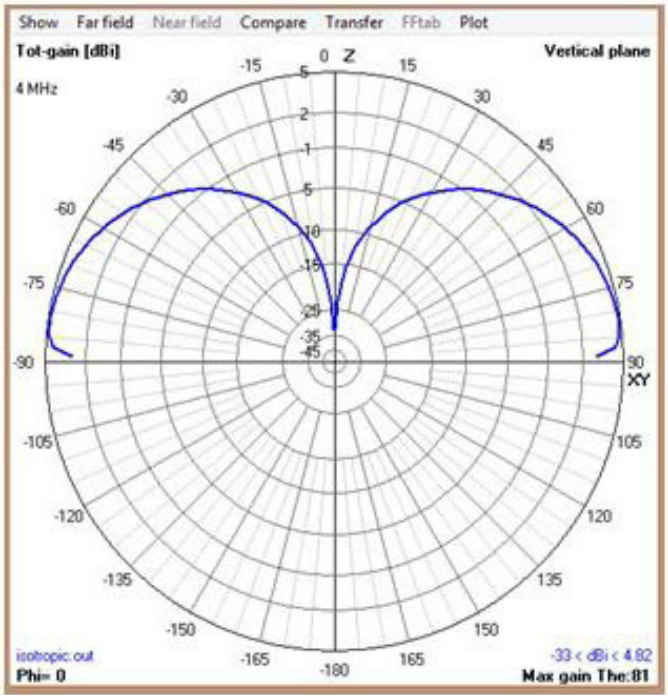

Figure 7 - ¼ λ vertical with 32 radials over Real Ground (salt water or within 5 miles of shoreline) at 3.8725 MHZ

The Exception

Many of us have heard ops using verticals with chest thumping audio. Given the vertical's lackluster performance displayed in the above models how does the Big Gun operator obtain such stellar results?

Changing the conductivity of Earth Ground from moderate to that frequently encountered in wetlands, a significant improvement is observed in the Ground Mounted Vertical. For highly moist loamy ground inland the simulation indicates a 2 dB plus increase (+1.07 dBi) in the vertical antenna gain as shown in Figure 6.

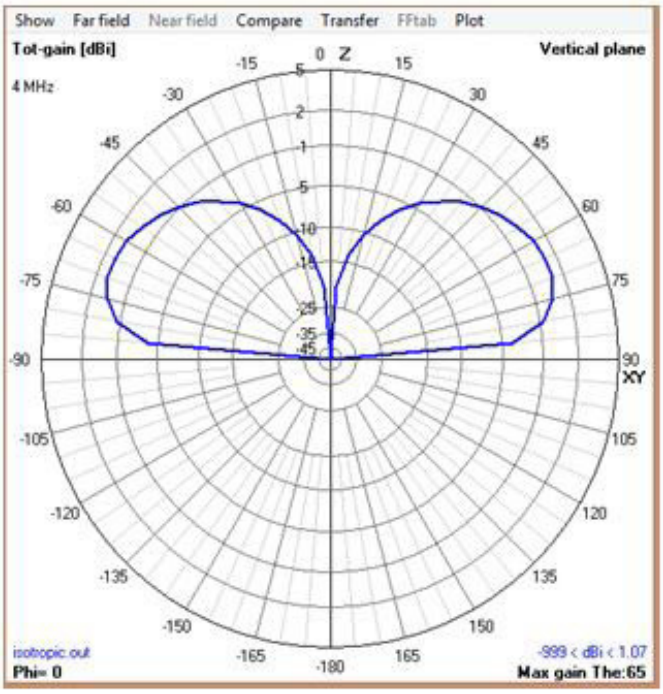

Figure 6 - ¼ λ vertical with 32 radials over Real Ground (moist loamy soil) at 3.8725 MHZ

The vertical's gain improves even more over salt water or near the beach. Figure 7 displays the improvement that can be expected when the Earth Ground is either Salt Water or within about five miles of major saline bodies of water.

Notice the dramatic change in the shape of the radiated pattern lobes and mostly the sudden near theoretical gain and radiation pattern when compared to a Perfect Ground. (Reports of amateur ops dropping a 20 foot length of wire into the surf and producing international broadcaster level signals are legend.)

As can be seen, much of the gain variation in verticals can be traced to ground radial systems and soil conditions. However with the information developed here a minimal ability to associate quantitative values with the effects of varying conditions permits an op to identify when a vertical can work to advantage.

The Dipole

Horizontal dipole antennae have been proven to provide 2.1 dB of gain over the Isotropic model in Free Space. This part of the discussion will cover the basic dipole over Real Earth at a height of ½ λ over the surface.

In Figure 8 it is immediately obvious that the dipole will exhibit a gain of over 8 dBi as opposed to the 2.1 of the Free Space model. That is a big difference. This is

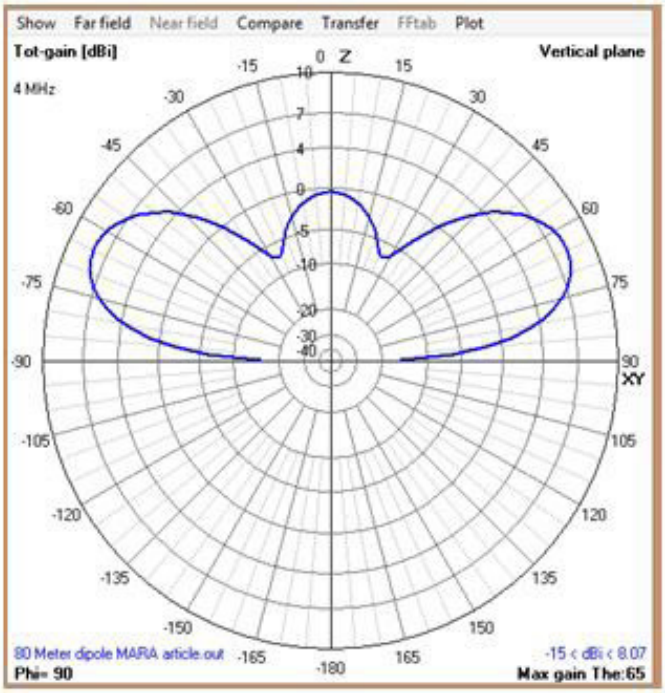

Figure 8 – Horizontal dipole at forty meters height above Real Ground (moderate conductivity) at 3.8725 MHz

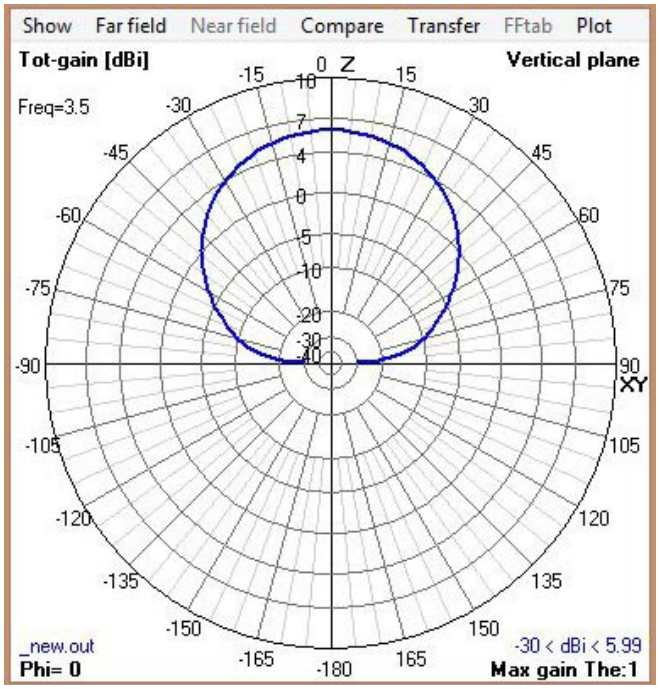

Figure 9 – Horizontal dipole at twenty meters height above Real Ground (moderate conductivity) at 3.8725 MHz

often overlooked by ops when selecting and comparing antennae.

The same antenna over salt water or near saline bodies of water with loamy soil will yield about 8.8 dBi. While 0.7 dB will not like be perceptible to the human ear when working with digital modes the increase may make the difference needed to get a message through.

Lowering the antenna to twenty meters (¼ λ) above ground yields a modified radiation pattern with most of the signal directed upward instead of lower towards the horizon. Also the gain peak is reduced to 6 dBi. The trend is, as you lower the antenna height below ½ λ, the gain is reduced and the radiation angle increases which is normally undesirable.

The reason why the vertical antenna is often a poor performer when compared to the dipole should emerge for the reader at this point. It should also be pointed out that in some situations the vertical's low angle radiated power will exceed the low angle radiated power of the dipole even though the dipole may exhibit higher radiated power at a higher angle. For DX work the vertical in such situations will outperform the dipole.

The ground mounted vertical is a fitting solution for amateur service provided care is exercised to determine if the ground is suitable for reasonable radiated power. For directive arrays (4 Square etc) in the right location it can be a stellar solution. If you live on a rock and cannot obtain a good earth ground the dipole is likely a better choice.

[5] Broadcast stations are mandated by the FCC to use a minimum of 120 radials to minimize ground losses. Why that number?
In 1937 RCA's Brown, Lewis and Epstein paper presenting test results of ground radials established the benefits of ground radial systems with ground mounted verticals. Their empirical work showed that 120 radials was a point where diminishing returns occurred or where an increase in radial numbers resulted in only a slight increase of significant radiated power. Consider that AM broadcasters ran power levels up to 50 KW output and any loss was a significant amount of lost RF energy. Also the consistency of results with 120 radials allowed the FCC to be confident in the performance of the station's transmission facility.

Later work by amateurs determined that at amateur power levels neither the large number of 120 radials nor the radial length being a ¼ λ long was an actual necessity. Experimental work has determined that 64 radials of 1/10 λ are sufficient for amateur work. There is a big difference in losing over 25,000 watts of RF and 50 Watts of the 100 Watts amateurs typically use. Further, amateurs determined the radials do not have to be buried, but just laid on the surface of the ground or grass. Many ops lay the radials down and use Grass Staples (available from Home Depot and Lowes in the plant and garden department) to pin the radials close to the ground. They cut the grass short, pin down the radials, and after a couple of weeks mow the grass with the mower raised about an inch or two higher. Over the growing season the wire is pulled downward by the grass so that the mower can be lowered back to a normal height. This avoids the expletive laden sessions of unraveling valuable copper from around the mover blade shaft. AR

Grandma Mara's RAMBLINGS

Walter and I have been kind of thinking about what to do for our anniversary this year. We figure we'll celebrate either before or after Field Day, as we don't want to miss the fun with Wendy and her family, and this year, her new beau.

We already have "our" favorite spots at the nearby campground reserved for the Friday, Saturday, and Sunday of FD weekend.

Walter has been talking about trying a 43' aluminum vertical with a remote antenna tuner at the base to replace the trapped vertical in use before. He has been spending most of his spare time out in the shop, making various parts in readiness for springtime and better temperatures.

As for the anniversary celebration, we just might hit the road again, like we did on our honeymoon, and see where it takes us.

As for the anniversary celebration, we just might hit the road again, like we did on our honeymoon, and see where it takes us.

I see there is a passenger/vehicle ferry running from Portland, ME over to VE1VQ's area in southern Nova Scotia. They've even reduced the rates from last year. That might be an interesting ride. We'll have to look at the rules about operating our rigs in Canada.

Now, as I write this in mid February, the idea of seeing green grass and warm temperatures seems rather distant and unlikely. Walter is even starting to grumble about the cold and the snow that seems never ending. There has been none of the mid-winter warmish spell several day period that we usually seem to get around this time of year. Keeps up, there won't be any place to pile the new snow.

It can't last much longer! Good thing the antennas are holding up. It would be very difficult getting to them for any repairing now. Guess if this was necessary it would have to be the time to see how far away we could work someone on a dummy load. AR

TECH AND OTHER STUFF

by VE1VQ

Back in the late '60s when I studied for my ham ticket, the local club had a code practice oscillator (CPO) made with tubes. This being before transistors were commonly available. It seems to me that it was home brew but I couldn't swear to that. I do remember how nice it sounded and how much punch it had, filling the room with sound.

I really don't need one for myself, but I just thought it would make a nice project for the column, and perhaps someone might make use of the circuit, or use the idea of it to make a CPO of their own.

Have you listened to a square wave audio signal with headphones? Not easy on the ears after even a short period of time.

It is easy enough to build a basic audio oscillator using the old tried and true 555 integrated circuit. In fact, there are a lot of integrated circuits that can be made to function as a square wave generator.

Have you listened to a square wave audio signal with

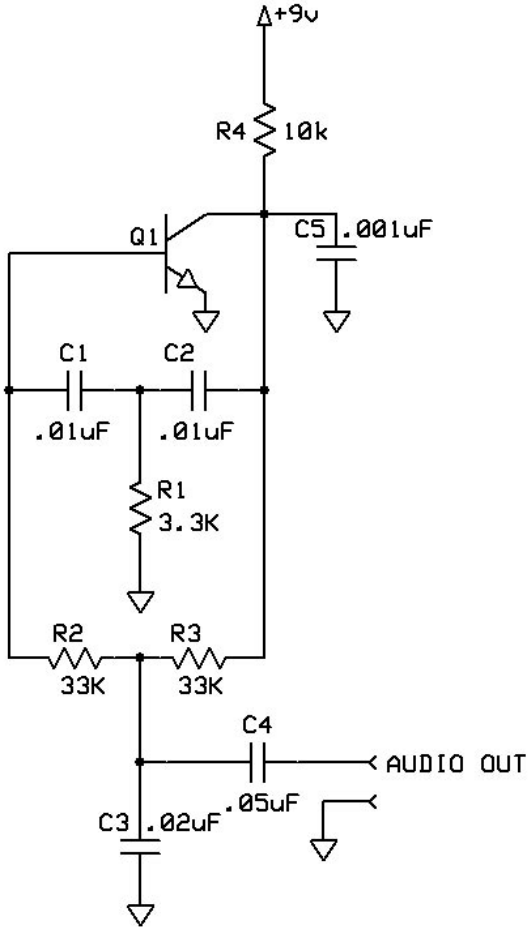

The basic Twin-T audio oscillator circuit. Capacitor C3 is in the range of two to three times the value of C1 or C2. Resistor R1 is approximately a tenth of the resistance of R2 or R3. Q1 is any general purpose NPN transistor. C5 is to prevent oscillation at RF frequencies.

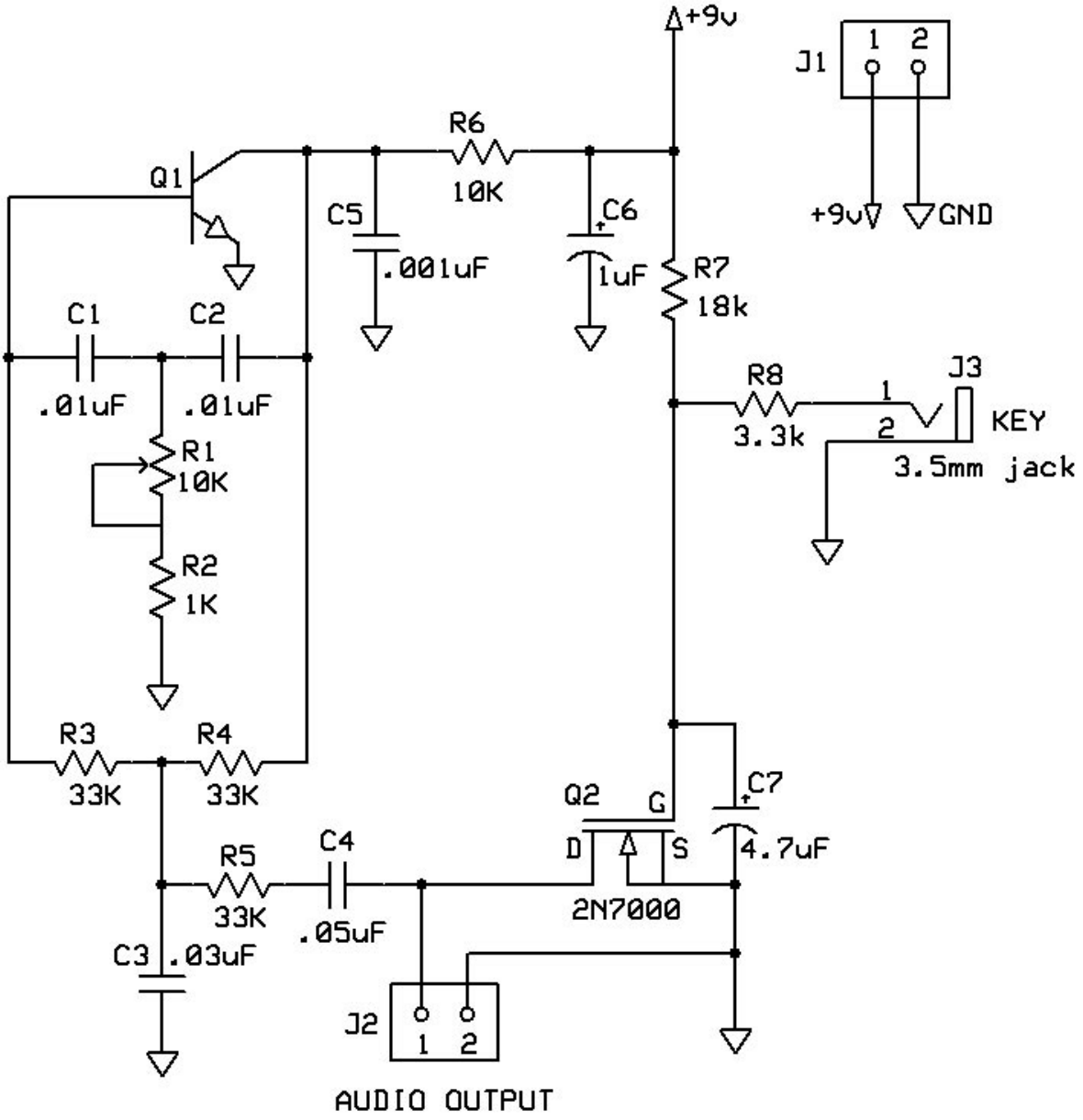

Figure 2. The Twin-T circuit with a few additions. A variable resistor (R1) has been added to vary the output audio frequency slightly. Resistor R2 sets the high end frequency. MOSFET Q2 keys the output and provides shaping for the dits and dahs. C3 is made by paralleling three .01uF capacitors. C4 couples the audio out to any following amplifier. Resistor R5 lessens the effect of Q2 shorting the oscillator output when the key is open.

headphones? If you have, you know it's not easy on the ears after even a short period of time. If you want to spend some time experimenting, you can add filtering to turn the output into something somewhat resembling a sine wave. However, if you have to go to all of that trouble to produce a nicer sounding square wave, why not just produce a sine wave in the first place? A transistor and a few resistors and capacitors is all it takes. And you only have to use a few more parts than with a 555 circuit.

The basic Twin-T audio oscillator shown in Figure 1 produces a nice sounding waveform with standard value components. With no load on the output it produces a peak-to-peak voltage of xx volts.

If you already have an audio amplifier, and this is all you need, you can key the voltage to the top of resistor R4, or the audio output through the open key. Having tried both ways, I prefer the sound of the first option.

Substituting transistors probably will affect the output level and stability of the oscillator. While most of the

half dozen or so I tried worked (after a fashion), some were better than others. Some had a higher output, some oscillated with the value shown for R1 while others needed more or less resistance. The transistors with a much higher frequency response tended to oscillate on both audio and RF frequencies requiring an additional capacitor (or capacitors) to kill those extra birdies. In some of those cases, you won't know about the birdies from the sound alone unless you are watching with an oscilloscope. The transistor I finally settled on was from a batch of a couple of hundred general purpose NPN types I bought years ago for a few cents apiece.

Another circuit, shown in Figure 2, is a little more elegant, using a FET and a few parts to shape the audio output, ramping the audio level up and down (on key closure and release), providing better shaping to the code element (rather than the hard on/off of Figure 1). Capacitor C7 and resistor R8 sets the time it takes for the keyed output to reach a level voltage (attack time). The combination of R7 and C7 set the output decay time when the key is released.

The idea of using a field effect transistor (FET) to shape the audio output came from K4ICY's web page at **http://www.k4icy.com/weekend_radio_3tr-audio-amp.html**.

FROM EIGHT TO TEN

For all of us poor misguided folks running Windows 8/8.1, there is a ray of light and a spot of hope in our future. It appears that Microsoft has announced there will be a free upgrade to Windows 10 when it becomes available later this year. Not only that, but it seems there will be a free upgrade for Windows 7 users as well! If this is true, then yes Virginia, there is a Santa Claus.

I have three office HP desktop units running 8 that will be first in line to be upgraded. My laptop running 7 will wait for a while longer until I trust the new OS enough to make the change. Having been suckered into buying computers with Win8, it will be a while before I trust anything said in the advertising about how great the new software is.

FREE WINDOWS SOFTWARE

Looking for some quality software for desktop applications but don't want to pay the price the developer's are asking, and not willing to use pirated stuff? Check out the GNU.ORG site for **free Windows software**. There's stuff on there to replace Microsoft Office, PageMaker, InDesign, QuarkXPress, Outlook, Outlook Express, Adobe Illustrator, Macromedia Freehand, CorelDraw or Xara Xtreme.

Maybe there's something on there you can use! Did I mention it's all free!

Another place for the Windows free stuff is **PC Magazine**. They've been around for a long time and I've found their recommendations to be good. A third location is **MAKEUSEOF.COM** with more good free stuff. Check them out.

By now, you probably get the idea. If you want/need/covet some commercial software, there is likely some free program that will do the trick. Simply type "free windows software" in your favorite browser's search window.

Any site offering you a free download of the latest ***commercial*** *product should be approached with a great deal of caution*. The old warning about *if it is too good to be true, it probably is*, applies here. My suspicion is that the site is trying to lure you into somewhere you don't want to be. Either to load malware/spyware or a virus on to your computer or to scan your machine for bank account or credit card information. AR

ARRL FIELD DAY

- 2015 -

Field Day is always the fourth full weekend of June, beginning at 1800 UTC Saturday and running through 2059 UTC Sunday. Field Day 2015 is June 27-28.

QUOTE OF THE MONTH

"Live simply, love generously, care deeply, speak kindly, leave the rest to God."

Ronald Reagan

DI-DAH-DI-DAH

Likely, many of you have never heard of **Susan Boyle**. I hadn't until recently when I was surfing the web, looking for a particular piece of music.

Early in her life, she was mistakenly diagnosed as having suffered oxygen starvation during birth and labeled

simple or *slow*. Those labels followed her through her school years and made her life miserable. A more recent diagnosis indicates that she most likely has a form of autism.

In April of 2009, Susan was a contestant on the British television show Britain's Got Talent. At the time, she was a 47 year old, overweight, and not a particularly physically attractive woman. It was evident from the judges speech, facial expressions, and body language that they didn't expect anything at all in the form of talent from the likes of her. Almost as if she was wasting their time. Camera shots of people in the audience indicated that they felt here was a person of no value.

Camera shots of people in the audience indicated that they felt here was a person of no value.

When asked what she was going to sing, she announced it would be "I Dreamed a Dream" from the Broadway production Les Miserables. There was more eye rolling from the judges when she said her dream was to be a professional singer.

And then she opened her mouth and sang!

Within seconds, the audience was on its feet with a standing ovation. There was definitely no more eye rolling! No more out-of-the-side-of-the-mouth remarks. After she finished, all three judges gave her top marks and very high praise. One apologized for their collective behavior.

She has since gone on to a successful singing career. Her first album "became Amazon.com's best-selling album in pre-sales on 4 September 2009, nearly three months before the scheduled release. In Britain, Boyle's debut album was recognized as the fastest selling UK debut album of all time." Wikipedia

Every now and then, we get to see a Susan Boyle, and our lives are so very much the better for having done so.

So often we look at an individual and dismiss him or her because of their physical appearance, the clothes they wear, or their age. To often we only look at their outward attributes and never take the time to see beyond the obvious.

Sometimes we do get a chance to see beyond, to view what most of the world would never take the time to look for. Every now and then, we get to see a Susan Boyle, and our lives are so very much the better for having done so.

Until next month,

VE1VQ