The MERCURY MicroVolt

FEBRUARY 2018 VOLUME 18, No. 2

Mercury Amateur Radio Association - MARA
North America - North East

CONTENTS

OTHER STUFF

Links that will take you to web locations referenced in this newsletter are shown in italicized blue text.

Past issues of the MARA NE NEWSLETTER may be viewed at http://ne.mara.net/newsletters.pdf

This site does not use or place cookies or tracking whatzits of any kind on your computer.

E-mail your comments, ideas, or submissions to MARAne@mara.net or to VE1VQ@eastlink.ca

FROM THE DESK OF THE PRESIDENT

Recently I stumbled onto a copy of QST from August 1960. Inside the cover was a small paragraph which listed the subscription rates of that time for annual membership. Imagine a one year membership being $5.00.

Thinking back to what I earned as a nine year old brat being twenty-five cents an hour, five dollars was a serious chunk of change. A king size Coke was $0.10 as was a Babe Ruth or Black Cow candy bar. I knew a lot of people in the area where I lived earned a dollar an hour in 1960, so the QST subscription for them was over five hours of work given they had to pay Federal and State Income Taxes. Ow!

"A king size Coke was $0.10 as was a Babe Ruth or Black Cow candy bar.

On a lark, I ran a sanity check to compare today's inflated $49.00 annual subscription rate to that of 1960. According to ***https://data.bls.gov***, $49.00 today would have been $5.88 in August of 1960. In other words, QST costs about 18% more than it did in 1960.

Now I understand why Dad was so bug eyed when his nine year old work-in-progress tried to buy a subscription to QST in 1960.

73,
Chuck
WD4HXG

Grandma Mara's RAMBLINGS...

Life has a way of smacking you side the head every now and then, when you become complacent and think that everything is good and should always be this way. In the past week we've had two shocks; the first was that Walter had a wakeup call of sorts, with a mild heart attack. The second was my son and his family were in a car accident and demolished the vehicle in which they were travelling. It skidded across the lanes on the slippery road surface, smashed through a poorly maintained guard rail, and went down over an embankment. No one was seriously injured, but there were some "minor" broken bones and bad bruises. The officer who responded to the scene of the accident said it was a good thing for air bags or it would have been a lot more serious.

Thankfully, his vehicle insurance will take care of the replacement set of wheels.

Walter was lucky as well. The doc who checked him out at the heart clinic, told him what he had was an early warning attack and that he would have no lasting damage from it. Now, he is on some form of long term medication to keep things in check. That same doc also told him the next time he had to shovel the snow to take it easy and slow and he would be fine. There was also some thought the cold air played a part in the event.

We both are on pretty good diets. Not diets like losing-weight-diets but good as in healthy eating style. Of course, neither of us smoke or drink so that wasn't a factor in it. The doc said it was essentially a luck of the draw kind of thing.

"The doc said it was essentially a luck of the draw kind of thing.

Anyway, we're both thankful that it was a warning and not the real thing. As we are thankful that my son's vehicle accident was only what it was, and no one in any other vehicle was involved.

When Walter came home after the over night observation stay in the hospital, he settled back into his radio room chair with a big sigh, smiled and touched his Christmas present keyer paddle, and remarked how good it was to be home again, and with so much to be thankful for.

The old folks in the community when I was growing up always said bad things came in threes, as in if you knew two people died in the town, that meant there would be a third one before long! Grandma doesn't believe in folk lore like that, but I'll keep praying anyway that nothing more happens.

TECH AND OTHER STUFF

MY FIRST STATION

My first ham ticket was acquired in the late 1960s while I was still in electronics tech school, and tubes were in their prime. Our instructor was a ham and he encouraged us to "go for the gusto" as one old beer ad used to proclaim. He slanted a lot of the classes leading up to the exam date with material that he knew would likely be on the tests. We even had a few CW receiving practice sessions.

I didn't know much about transmitter and receiver design and theory then but I managed to glean enough from those classes to meet the requirements for my amateur license.

I don't remember what the CW sending and receiving speed for the exam was, after all these years. I think it might have been either five or seven words per minute. You had to send and receive a full minute without mistakes in order to pass. The government examiner said he was going to send a test message to get us used to his sending. After he did that, he announced he would send the actual test. Since both the test text and the official text were the same, it was reasonably easy to make a passing grade on that part. Sending to the examiner, of course, was also fairly easy to pass. The examiner complimented me on my sending proficiency, although I'm sure my "fist" was atrocious, what with "test nerves" and lack of experience.

After the examination, we were told if we had passed (or not). We were also informed that the actual license would take about a month to come in the mail. Of course, being young and impatient, I started looking for it the following week. After about a month, others in the class started reporting receiving of theirs. When, after another couple of weeks, mine still hadn't arrived, I mustered the courage and phoned the federal Department of Transport office in Halifax (NS). Turns out mine had somehow gotten lost in the bureaucracy and hadn't gotten sent out. Talk about Post Traumatic Stress!

"After the examination, we were told if we had passed (or not).

That first ticket was good for CW only, with no expiry, on all bands. After six months, we could apply for fone privileges on ten meters and up, but we had to submit our station log to prove we had been on the air during that period and made a sufficient number of CW contacts. This was before 2-meter FM ever happened. Some of the class members made the application.

With ticket finally in hand, and with VE1AUF for a call sign, I started construction of the station equipment.

HEATHKIT HR-10B RECEIVER

My first receiver was a ***HeathKit HR-10B*** that actually worked when I powered it up, which probably says more for Heath's great construction manuals than for my technical abilities at the time. The thing drifted so badly when turned on that I eventually modified it so the filaments of all the tubes were on and warm so long as it was plugged in. That simple mod fixed the frequency drift, for the most part, but didn't do anything for the common problem of poor sensitivity on the fifteen and ten meter bands. Selectivity was also very poor but that was the way most receivers were in those days.

The ***transmitter***[1] was from a mid-1960s era ARRL Handbook and is very similar to the one in the reference listed below. The tube line up was a 12BY7A oscillator/driver and a 1625 final. The latter was an 807 with a twelve volt filament (used in the Command series transmitters). Since the 12BY7A had a tapped filament and could have been operated from a six volt source, I've always wondered why the transmitter couldn't have been designed to use an 807 final (which was more commonly available and cheaper in cost) and the filaments of both tubes powered from a six volt AC transformer. That questioning came later when I learned more about these kind of things.

The transmitter output would nicely light up a

[1] *http://www.w7ekb.com/glowbugs/projects/inexpensive 75wattxmitter.pdf*

sixty watt light bulb so I thought I was doing great! When I finally got it tested by another ham in the area with an actual watt meter, it turned out that it produced an honest to goodness 37.5 watts. (with a roughly 75 watts input). But at least it had some output! Since then, I've not trusted light bulbs as power indicators!

As was common for the day, the transmitter was was cathode keyed, meaning the cathodes of the tubes were lifted or not connected to ground until the Morse key was pressed. That meant that there was some hair raising voltage across the key contacts. After experiencing that thrill first hand (pun intended) a few times, I built a key interface using a low voltage relay, so the key activated the relay which turned on the transmitter. I also added an audio side tone generator keyed by another set of contacts on that same relay and which fed to my headphones so as to better monitor my fist.

"That meant that there was some hair raising voltage across the key contacts.

FT243 CRYSTAL

Changing bands involved changing plug-in coils on both the output of the 12BY7A and that of the final amplifier.

Frequency control was with a crystal. I had one in the old US eighty meter novice band that went from 3.700 to 3.750 MHz. I remember calling CQ and then tuning the receiver up and down the band listening and hoping for a response (or perhaps not, depending on what my anxiety level was). In those days, the US Novices were crystal controlled as well, so everybody called and tuned, and called and tuned. It was rare that someone answered on the same frequency you were calling on.

HEATHKIT HG-10B VFO

Eventually the transmitter crystals were replaced by a Heathkit HG-10B VFO, and I thought I was in ham heaven. How could life get any better?

WHY DON'T YOU JOIN US?

If once upon a time, you belonged to one of the MARA groups, but your group has dissolved, why not join us here . We have no membership dues and it doesn't matter where on the globe you reside, Simply go to ***http://ne.mara.net/join.pdf***, print and fill out the form, then scan and e-mail it to VE1VQ (contact information is on the form).

Even though MARA no longer provides emergency communications services for the LDS Church, it is nice to be able to associate with like minded individuals, with amateur radio in common as a hobby.

DO YOU KNOW WHAT YOUR FURNACE IS DOING WHEN YOU ARE NOT HOME?

Some months ago, after doing some serious on-line research, I purchased a ***Honeywell RTH6580WF WiFi thermostat*** with the idea of installing it in the eastern residence. The idea being, when I was away, I could check on the house temperature and make sure the heat was on so the pipes wouldn't freeze, or warm up the house when coming home after an extended away.

My heating system is over twenty years old. Forced air with two furnaces - one a wood burning, the second an oil unit. No cooling function.

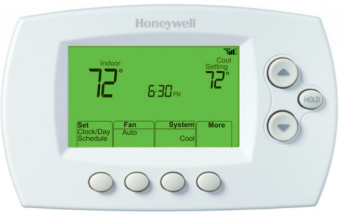

The thermostat I was replacing was battery powered and only needed two wires to operate, although there were more stuffed in the wall.

First thing I noticed was the terminal designations in the new thermostat weren't nearly the same as the old one, or the terminal strips on the control boxes of the furnaces. Ok, this can't be all that hard. After all, twenty year old furnaces weren't that complicated.

The wood furnace operation was simple, light the fire, the furnace heats up, the heat sensor in the duct over top turns the forced air fan "on". If the the oil furnace is running when this happens, it

switches the oil burner "off".

I found the two terminals in the old thermostat that when shorted, turned the oil furnace "on" and provided heat. And again, once the oil furnace plenum comes up to temperature, the fan switches on.

The instructions for the new one required power from the furnace controller - essentially 24 volts AC. They also told me I needed a "C" wire. Nary a C wire to be seen. Did I mention the furnaces were twenty something years old? The instruction sheets with the new one gave some suggestions but which were no help at all.

To the Internet!

There are many sites on-line that attempt to provide hook-up information to install thermostats without the magic C wire. Many of these assumed that the C terminal existed somewhere on the furnace, or perhaps the C wire was tucked unused in behind the thermostat or in the wall. On those installations where there was no C wire, a 24 volt AC transformer was added to provide the necessary power. Some even gave Honeywell part numbers or those from another manufacturer. Many sites had conflicting connection information or were obviously wrong. As an example, some claimed you needed only the C wire to power your

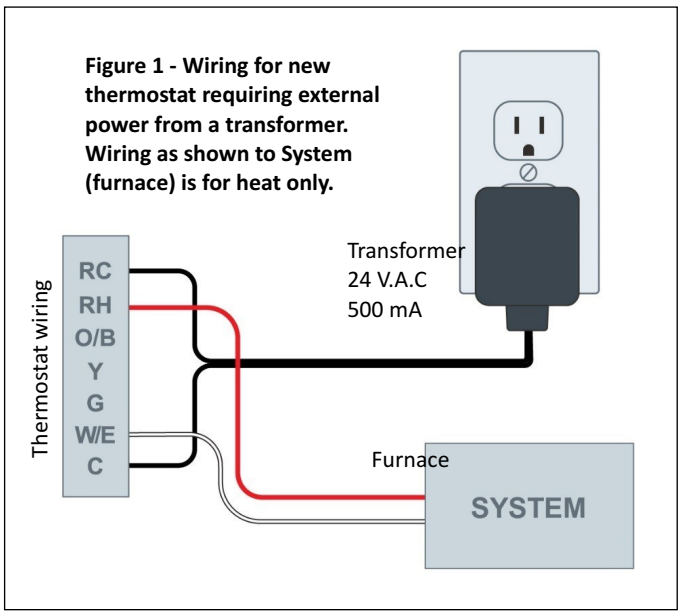

Figure 1 - Wiring for new thermostat requiring external power from a transformer. Wiring as shown to System (furnace) is for heat only.

new thermostat - no mention made of how the power from the controller or transformer was to make it work without the second wire connection.

My Honeywell unit had a jumper wire already pre-installed between the R and Rc terminals. Some said to ignore the jumper wire between R and Rc, saying to leave it in, while others said to remove it.

Finally, I found a YouTube video at ***https://www.youtube.com/watch?v=IlJZ_Llln0E*** that made sense. It showed how and where to connect the transformer, and where to connect the wires for heat. The guy who made the video also says to remove the jumper between R and Rc.

If you have a simple installation that only requires control of a furnace for heat, and you have this same or similar Honeywell wifi thermostat, get yourself a transformer (24 volt AC at half an amp (500 mA) of current) and connect the low voltage connections or wires to the C and Rc terminals as shown in the video and Figure 1 above. I already had a transformer installed on my electrical panel that previously powered a door bell now no longer in use.

"So now I had the thermostat working in the manual mode. Time to enable the wifi."

So now I had the thermostat working in the manual mode. Time to enable the Wi-Fi. The instructions were straight forward and there is a video by the manufacturer on YouTube. I tried the process with my HP laptop running Windows 10. Failed with an E01 message - "During the Wi-Fi Setup, the router lost power". Tried again several times. Tried with my IPad. Same message. Tried with my iPhone. Zip. Had my engineer son-in-law who was visiting try it. Failed. Broke down and called tech support. After going through the same things again, the guy on the other end of the phone told me to return it to the store. He sent me an e-mail for authorization to take with it.

A couple of weeks later I got a replacement. A couple of months after that, I was back on the east coast, and did the whole replacement thing once more. Got to that same point in the installation where it worked manually. Enabling the Wi-Fi with the laptop got me the same error message E01. Tried it again and got E02 - "Invalid Wi-Fi

...continued on page 10

FEATURE ARTICLE

RESTRICTED SPACE HF ANTENNA PART THREE

by a contributor, who for personal reasons, requests anonymity until retirement (and perhaps even after!)

Part 2 appeared in the January 2018 Newsletter

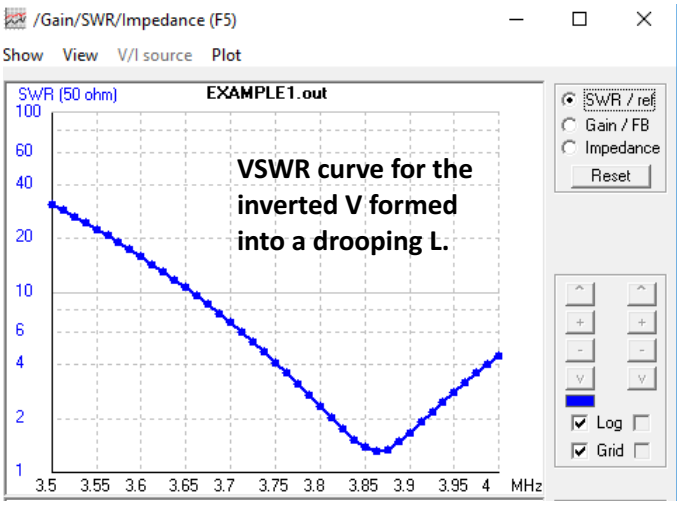

The resulting pattern was as expected. Reducing the antenna height caused a reduction in radiated power and the launch angle of maximum signal power.

. The simulation indicates the radiated pattern will be as displayed at the top of the column to the right.

Notice that the energy is now directed nearly overhead as opposed to the peak energy being radiated down on the horizon as observed in the prior pattern plot when the antenna was 1/2 wave-length above ground. Also, when the antenna was at 1/2 wavelength above ground the peak gain on the antenna was 7.68 dB. As can be seen on the plot the peak gain is 3.83 dB or nearly a 4 dB loss of antenna gain. Instead of having your radiation peak at 65 degrees at 7.68 dB, you are now radiating a peak at 0 degrees right straight up and with reduced gain. Indeed the gain at 65 degrees is down to about -3 dB or a delta of over 10 dB between the dipole 1/2 wavelength above ground and the current model.

"Instead of having your radiation peak at 65 degrees at 7.68 dB, you are now radiating a peak at 0 degrees right straight up and with reduced gain.

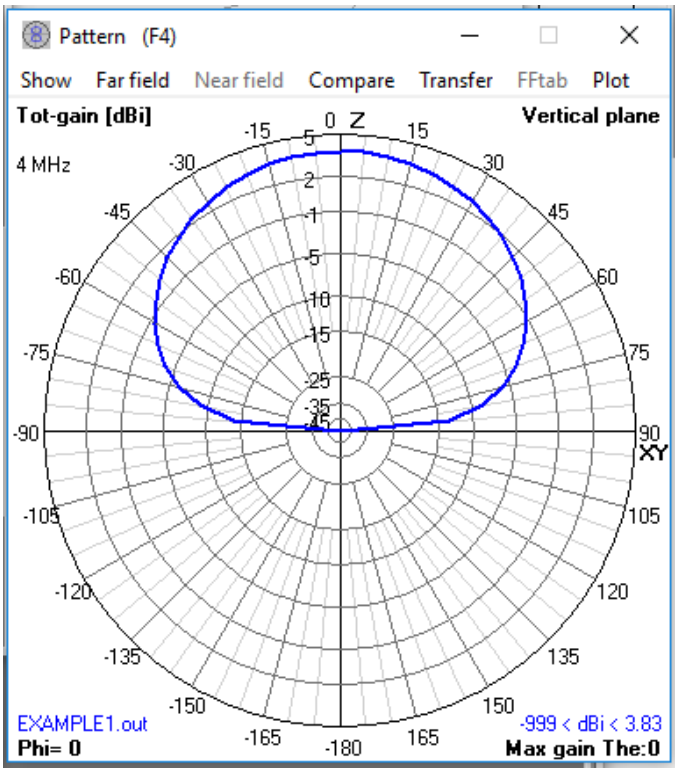

Below is another pictorial of the reduced height antenna's radiated pattern.

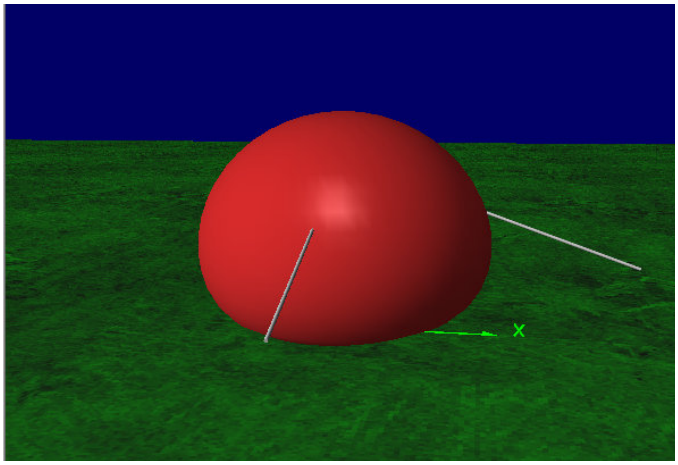

How much is the 10 dB difference? The answer is about the difference you would notice going from 100 watts to 10 watts. Mother Nature tolerates our attempts to make an antenna work but she also extracts a price for not abiding by the rules.

MARA APPLICATION NOTE

Fixing RS-232 Serial Interface Manufacturing Errors on Your Gear

Amateurs frequently want to interconnect their radio equipment with a desktop or laptop computer using RS-232 interfaces. It is an easy task provided you are aware of some of the manufacturing and design mischief that occurs. Initially the normal RS-232 interconnect set up will be discussed. Then frequent manufacturing errors are covered with methods of remediation.

RS-232, like many other systems used in electronics, is defined by a standard. The current printed version of RS-232 is designated TIA-232F. A Google or similar search engine request for TIA-232F will provide links to the current standard.

When interconnecting your radio, computer and other peripherals you will need to identify if the equipment is TIA-232F compliant and if the piece of equipment is DTE or DCE. The reason for verification of equipment compliance with TIA-232F is over the years multiple product vendors have taken liberties when implementing the protocol. TIA-232F specifies the signal level maximums – minimums in terms of voltage, connector used with DTE devices and connector used with DCE devices as well as connecting cable characteristics. The maximum cable length is specified as 20 meters but faster data rates will reduce the usable cable length significantly. The spec further defines each connector's pin utilization. As an example, pin 2 of a DTE device is used for receiving data while Pin 2 of a DCE device is used for transmitting data.

What is DTE? DTE (Data Terminal Equipment) is a piece of gear which is typically used as a controller. In the case of using computer control with your gear the computer runs an application such as HyperTerminal or Digipan allowing it to send command signals to the peripheral and display responses from the peripheral.

DTE devices have their roots in teletypewriters. Currently most TIA-232F compliant DTE devices will use a DE-9S[1] series D-Sub connector. The pin out is displayed in Figure 1.

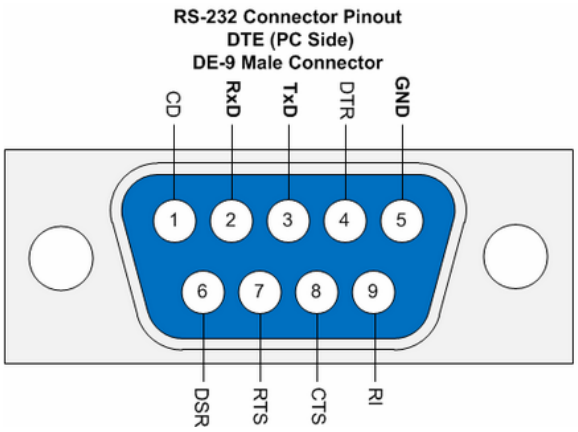

Figure 1

The connector shell will have a hollow cavity in which male pins in two rows of five and four each respectively are positioned. If your terminal or TIA-232F adaptor is compliant it will use the connector described above. Do not be surprised if the connector sex is different or that a connector such as RJ-45, Berg style, or other type of connector is provided by your equipment manufacturer on 'their variant' of an RS-232 interface. Remember the reference to 'liberties' earlier. In case of some older equipment you may encounter DB-25 series D-Sub connectors which have 25 pins. If you encounter such a connector you can buy adaptors which will transition to a 9 line link allowing use of the more recent DE-9S connector series.

DCE (Data Communication Equipment) has traditionally been devices such as telephone carrier supplied modems, military radio transceivers, relay controllers which switch power equipment on and off, and sensors which collect, store and send the data back to the terminal.

A TIA-232F DCE compliant device will use the mating female DE-9S D-Sub style connector. Figures 1 & 2 display the function of each connector pin on the respective male and female connectors. Notice that DTE Connector Pin 3 is used for data transmitted by your terminal equipment. The mating pin on your TIA-232F compliant DCE device uses Pin 3 for receiving data. Pin 2 (RxD) of the DTE device is used to receive data transmitted by Pin 2 (TxD) of the DCE device. This allows use of a cable for interconnection with a male connector on one end and female on the other.

[1] Many distributors and ops mistakenly call the 9 pin D-Sub style connector used in RS-232 service a DB-9. The correct base designator is DE-9.

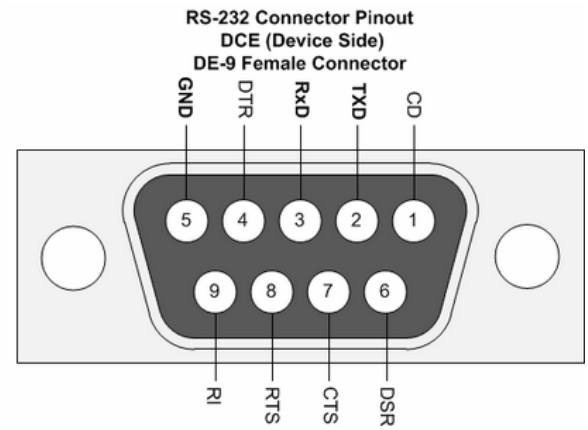

Figure 2

Each Pin connects to the same number pin on the opposite connector. The cable used is called a RS-232 Straight-Through cable. The reason for labelling the cable as such will become clear shortly.

It is not unusual to discover your DCE interface on your transceiver uses the same connector as found on your computer. Thus when you pull your TIA-232F compliant cable from the box to connect the gear, you discover one side connects and the other end cannot because one end of the cable is the same sex connector as the connector on the equipment. In years past you simply removed the wrong connector from the cable and changed to the sex needed to complete interconnection. This was labor intensive and given the frequency of the wrong connector being used on gear, the 'Gender Changer' was designed by crafty engineers. A typical 'Gender Changer' is simply two same sex DE-9S connectors mounted to each other, back to back. Then each numbered pin of each connector was soldered to each other using short wires.

Today you can buy commercially built Gender Changers in compact packages, which go a long ways to controlling cable clutter when you have to fix a manufacturer's custom RS-232 implementation.

Figure 3

Figure 3 above is an image of a commercially manufactured Gender Changer for changing a DE-9S female connector to male.

Figure 4 is the same product but it transitions the cable and gear male connectors to a female.

Figure 4

The next common occurring error implementing RS-232 is the reversal of signal pins. The vendor may use the correct sex connector but places the same signal on the pin out of the opposite mating connector. Obviously transmitting a signal to a pin at the other end which also transmits is not going to work very well.

This happens more frequently than you can imagine. Crafty engineers once again devised a fix similar to the Gender Changer. However instead of placing two same sex connectors back to back, two opposite sex connectors are mounted together and the Transmit Pin of one connector is crossed over to the Transmit Pin of the other connector. This is a case were a second wrong is used to make a right. The industry name for this device is 'Null-Modem'. Do not confuse the device with the normal modem

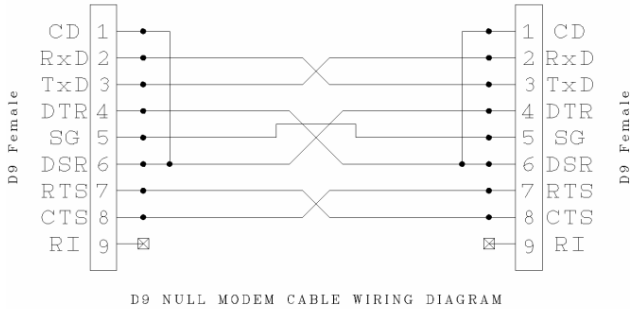

Figure 5

most of us think of for dial up connections. It is infinitely more simple, less costly and a quick fix. A wiring diagram of the Null-Modem is displayed in Figure 5.

Notice not only are a single pair of pins flipped by the device but all signalling line pairs are similarly transposed. There are two reasons for this. One is that when the wrong connector is used, frequently the mating device's signalling pin functions are duplicated on the same pins. Thus each pair of signalling lines needs to be flipped. The second reason is that as RS-232 devices have

evolved DCE equipment has taken on functions which typically were the domain of DTE equipment. As a consequence there are times were a DCE device can be utilized for limited DTE services. The null modem allows an engineer to easily connect two DCE devices together.

You can buy a commercially manufactured Null-Modem as shown in Figure 6 or resort to modifying your cable. I strongly recommend buying the commercially manufactured type unit displayed in Figure 6 as it is easy to confuse the pin numbers between the connectors when building the Null-Modem yourself or modifying the cable. Also note you can buy a pre-made Null-Modem cable as well as a Straight Through cable.

Figure 6

Figure 5, in addition to showing the pin interconnection, also displays the labels that define the function of each pin. The pins and description of what each does is listed below.

- CD (Carrier Detect)
- RxD (Receive Data)
- TxD (Transmit Data)
- DTR (Data Transmit Ready)
- SG (Signal Ground)
- DSR (Data Set Ready)
- CTS Clear to Send)
- RTS (Ready to Send)
- RI (Ring Indicator)

The fact that today, installations see more DTE to DTE and DCE to DCE connections, the need for three variants of the Null-Modem have been created. One uses two female DE-9's, the second uses two male DE-9's and the third uses one DE-9 female plus one DE-9 Male. These permutations have arisen primarily due to the proliferation of non-standard cables and use of the wrong connector on a device .

Ready - Set - Connect

Assuming you are about to connect two RS-232 devices together, here are steps which may help determine what parts you may have and need.

- Determine if your interconnect cable is a 'Straight-Through' cable or if it is a 'Null-Modem' Cable. Measure from Pin 2 on one connector to Pin 2 at the other connector on the cable. Note if you have continuity. Also measure between Pin 2 on one connector and Pin 3 on the other. Again note if you have continuity.

If you have continuity from Pin 2 to Pin 2 then you have a Straight-Thru cable. If you have continuity from Pin 2 to Pin 3 then you have a Cross Over or Null-Modem cable. If you have continuity from Pin 2 to 2 and Pin 2 to 3 recheck your measurements as this would indicate a 'really' non-compliant cable.

- Many manufacturers today do not mark their cable's function. Once you ascertain the cable's function, Straight or Null, mark it so next time you do not have to repeat the exercise. Many shops use marker pens and the labels NM for Null-Modem and S for Straight Cable. A suitable marker is made by Sharpie (See Figure 7). It has a fine point and makes it easy to mark the molded inset on many cables. The Sharpie pen part number is S-19421BL They are found in Staples and Office Supply stores as well as other retailers. The ink is durable and water resistant as well as resistant to most saponifiers.

Figure 7

- Verify the connector used on your transceiver or other peripheral. Is it a DE-9S Female? If not do you need to use a Gender Changer to connect your cable to it?

At this point you should have enough information to to identify the serial interfaces used on your equipment, needed cabling and where necessary how to remediate any non-compliance with RS-232. Later application notes will cover how to verify data is transferred across the cable using simple techniques.

Addendum

Message from a Networking Engineer about RS-232 evolution - "Difference between DTE and DCE devices".

vcjones Silver 11-20-2002 07:47 AM

Re: Difference between DTE and DCE devices

From Federal Standard 1037C -- Glossary of Telecommunication Terms

DCE = Data Circuit-terminating Equipment.

1. In a data station, the equipment that performs functions, such as signal conversion and coding, at the network end of the line between the data terminal equipment (DTE) and the line, and that may be a separate or an integral part of the DTE or of intermediate equipment.

2. The interfacing equipment that may be required to couple the data terminal equipment (DTE) into a trasnmission circuit or channel and from a transmission circuit or channel into the DTE.

synonyms Data Communications Equipment (deprecated) and data set (deprecated).

DTE = Data Terminal Equipment

1. An end instrument that converts user information into signals for transmission or reconverts the received signals into user information.

2. The functional unit of a data station that serves as a data source or a data sink and provides for the data communication control function to be performed in accordance with link protocol.

Given that the above sounds like gobbledegook, a brief history lesson:

Back in the dark ages of networking (before the Codaphone decision opened up the telephone network in the US, and the case for decades afterward in many other countries), to get from point A to point B, you had to go to the phone company to get a data line. To "protect" their cable plant, the phone company provided the DCE (aka modem or CSU/DSU) to take your data and make it palatable for their infrastructure.

Networking standards were defined in terms of the DTE/DCE interface, the definition of how your equipment talked to the equipment provided by the phone company (a government agency in most countries outside the US). Example DTE/DCE interface definitions include RS232, X.21, X.25, RS530, etc. Note that some of these interface protocols are for higher levels of the OSI model, such as X.25 and LAPB. At the physical layer, they define the physical interface (the connecter to use), the electrical interface (what value is a 0 and what is a 1), the functional interface (which pin is receive and which is send), and the procedural interface (hardware handshakes, who provides clock, and the like).

Be very careful of what you read, because many authors and manual writers never take the time to keep the details straight (be particularly wary of marketing literature, whose authors prefer to define old terms in new ways to make their product sexier). The classic examples are redefinition of the term "baud" to mean "bits/second" and "internal clocking" to mean coming from the device (rather than from the DCE, internal / external refering to the network infrastructure).

Bottom line: Use extreme care when reading, because many networking terms have been corrupted over the years, and their meaning in context may or may not relate to the formal definition. My favorite example was the marketing campaign about 10 years ago for "revolutionary new protocol independent routers" which, if you read between the line, were nothing more than multiport bridges! If in doubt, use the duck test: If it waddles like a duck, swims like a duck, flies like a duck and quacks like a duck, don't worry what the brochure calls it, it's a duck.

Good luck and have fun! And don't let anyone intimidate you... Networking is conceptually easy and common sense. It's just that the basic concepts tend to get obscured by jargon (particularly when used incorrectly), lost in the morass of details, or lost in history.

Vincent C Jones

www.networkingunlimited.com

...FURNACE - continued from page 10

password" Must be getting warmer (yup, that's a pun!). Tried the IPad - same error code (E02). Tried using the iPhone.

What!! - it connected? !!

Mind you, it took me over an hour using the iPhone because my chubby fingers kept hitting the wrong on-screen keys and taking me off somewhere I didn't want to be. But at long, long last it worked.

I downloaded the Honeywell thermostat app from the ***App Store***. Now I can log in from almost anywhere with my iPhone (with the app), or tablet or laptop (using a web browser). I can check the house temperature, see if the heat is on or not, increase the temperature to warm up the house, or set a low temperature and place it on "hold". The app shows the local area outside temperature and provides a 5-day forecast.

"I downloaded the Honeywell thermostat app from the App Store.

Using the browser to connect gives me more options over and above the app. It allows me to change what the thermostat will notify me of for things that may go wrong. One of the changes I made was to set an alarm point in case the interior temperature falls below a certain value for more than fifteen minutes. I will also get a message if the Internet connection to the thermostat fails, or the temperature gets to high.

All in all, kind of neat!

I might do the same with the little house on the prairie, but I'd probably have to get the local HVAC guy involved. This one's newer and a lot more complicated than the eastern one. First though, it wouldn't hurt to pop the cover off it…

QUOTE OF THE MONTH

If you haven't found it yet, keep looking.

Steve Jobs

The MARA NE Newsletter is always looking for articles of interest to LDS Hams.

If you have a radio related project, or simply something you think might be of interest to the readers, please contact Dave at VE1VQ@eastlink.ca

A new rig, a ham experience you've had, a DX-pedition to your backyard or a nearby park or on the other side of the world.

Whatever it is, we would like to hear about it. Don't be shy now!

DI-DAH-DI-DAH DIT

More and more, day after day, your privacy is being eroded. This is not anything new. It has been going on for a long time, but now with most of our sensitive personal data somewhere on line, it becomes easier for the "bad guys" to gain access to it.

Now, more than ever, many commercial web sites track your comings and goings. And not only on their own sites, but everywhere you visit on-line. Don't believe me, then take a look at an article on ZDNet written back in 2012 titled "**Why Do Not Track is worse than a miserable failure**".[1] Seems that the "DNT feature" is only regarded as a "suggestion" by many of the commercial advertising entities out there, or else they have a very perverted idea of what the rest of us think it means.

Some of you may be thinking, "well, why should he worry if he's not doing anything wrong?" Even if I am not doing anything illegal or bad or wrong, why should corporations/governments be monetizing and/or tracking what I am looking at or searching for on-line *IF I HAVEN'T GIVEN MY SPECIFIC PERMISSION*.

And, if you think your government is looking out for you and your best interests, then read the article, "**US deputy attorney general just called for 'responsible encryption.' Don't fall for it**."[2] "Responsible encryption" is another name for back door access into your computer data.

I'm sure some of you will remember the **Clipper Chip fiasco**[3, 4] of a few years back, sponsored by your friendly federal government. The Feds wanted US computer manufacturers to install a chip in every computer so they could access anything on that machine.

So what is a person to do?

There are some steps you can take to protect yourself, such as explained in a follow-up ZDNet article titled "**Online security 101: Tips for protecting your privacy from hackers and spies**".[5] These are very basic but if you are interested, they will lead to onwards.

What am I going to do? Most likely crawl back into bed and pull the covers over my head!

Until next month,
VE1VQ

[1] *http://www.zdnet.com/article/why-do-not-track-is-worse-than-a-miserable-failure/*

[2] *http://www.zdnet.com/article/us-deputy-attorney-general-just-called-for-responsible-encryption-dont-listen-to-him/*

[3] *https://en.wikipedia.org/wiki/Clipper_chip*

[4] *http://www.nytimes.com/1994/06/12/magazine/battle-of-the-clipper-chip.html?pagewanted=all*

[5] *http://www.zdnet.com/article/simple-security-step-by-step-guide/*